XYST260整车配件目录及配件价格$

（沙滩车）

星月集团经济运行部

22/01/2007

E-1

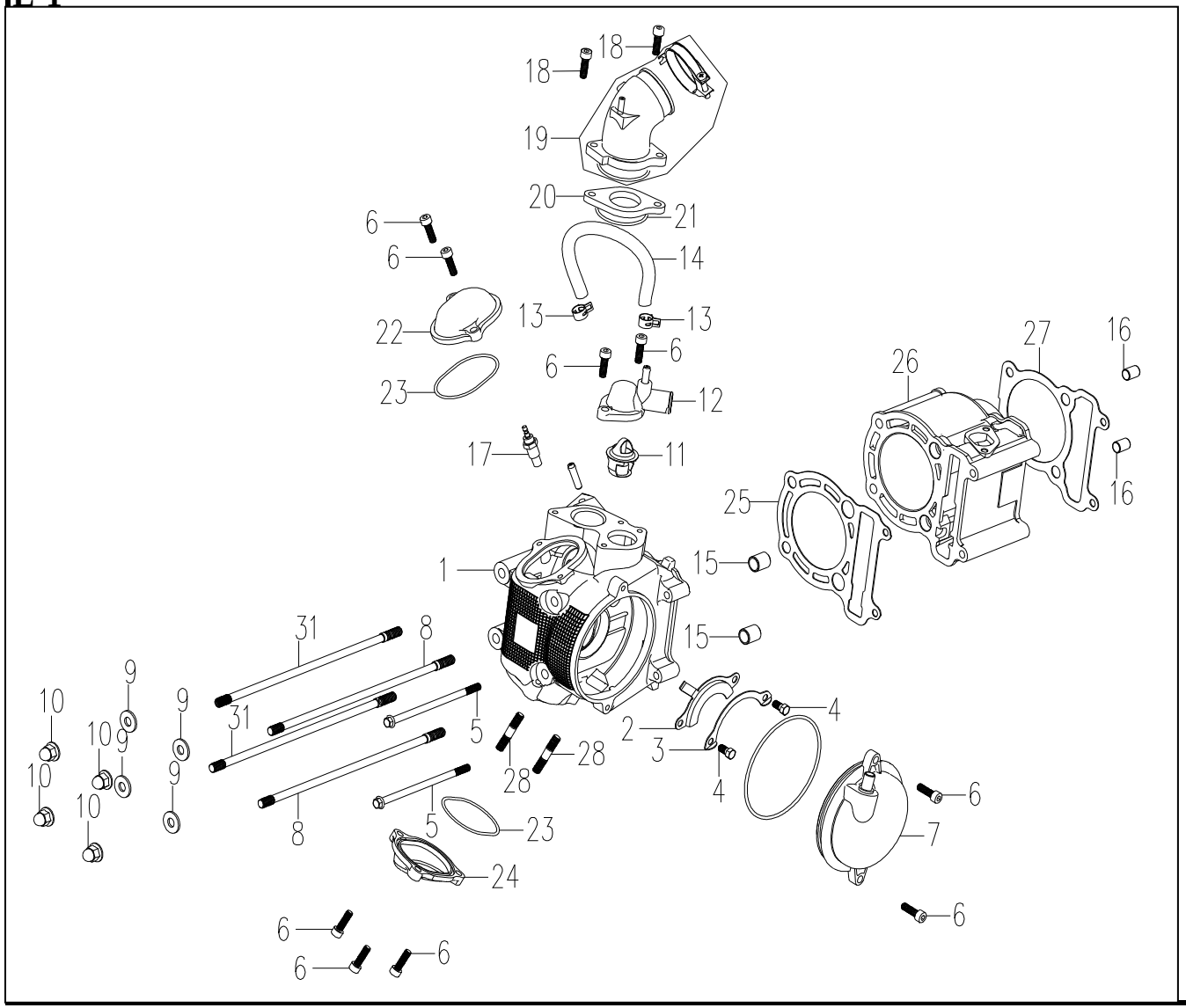
18
18
19
20
21
6
6
14
22
13
13
6
6
23
12
17
11
27
16
26
16
25
1
15
15
31
8
9
10
9
31
5
2
4
10
9
28
28
3
4
10
9
6
8
5
23
7
24
6
6
6
6

E-1 气缸总成---CYLINDER HEAD ASSY

序号 REF NO.	代号(PART NO.)	名称	DESCRIPTION	数量 REGD NO	备注 REMARK
1	127001010000	气缸头组件	HEAD COMP CYLINDER	1	
2	127001000010	凸轮轴定位板	ORIENT THE BOARD	1	
3	127001000020	凸轮轴定位板防松板	LOCKING AND ORIENT THE BOARD	1	
4	127001000030	定位板六角螺栓M6X12	HEXAGON BOLTS M6X12	2	
5	127001000040	六角法兰螺栓M6X119	HEXAGON FLANGE BOLTS M6X119	2	
6	127001000050	内六角螺栓M6X18	HEXAGON SOCKET SCREWS M6X18	9	
7	127001020000	气缸头左盖组件	LEFT COVER HEAD CYLINDER	1	
8	127001000060	气缸A螺栓M8X248	CYLINDER A BOLT M8X248	2	
9	127001000070	垫圈8.5X19.5X2	PLAIN WASHERS 8.5X19.5X2	4	
10	127001000080	盖型螺母M8	ACORN NUTS M8	4	
11	1270010008A	节温器组件	THERMOSTAT	1	
12	127001030000	节温器盖组件	THERMOSTAT COVER	1	
13	127001000090	通气管夹	CLAMP TUBE BREATHER	2	
14	127001000100	通气管	TUBE BREATHER	1	
15	127001000110	气缸头定位销14X16	HEAD CYLINDER PIN DOWEL 14X16	2	
16	12700100011A	缸体定位销10X14	CYLINDER BLOCK PIN DOWEL 10X14	2	
17	127001030010	温度传感器	TEMPERATURE SENSOR	1	
18	127001000120	内六角螺栓M6X25	HEXAGON SOCKET SCREWS M6X25	2	
19	127001040000	进气管组件	PIPE COMP INTAKE	1	
20	127001000130	进气管密封板	GASKET PIPE INTAKE	1	

E-1 气缸总成---CYLINDER HEAD ASSY

序号 REF NO.	代号(PART NO.)	名称	DESCRIPTION	数量 REGD NO	备注 REMARK
21	127001000140	进气管密封板O形圈	O-RING GASKET PIPE INTAKE	1	
22	127001000150	进气门盖	COVER INTAKE VALVE	1	
23	127001000160	气门盖密封圈	WASHER COVER VALVE	2	
24	127001000170	排气门盖	COVER EXHAUST VALVE	1	
25	127001050000	气缸头密封垫组件	GASKET HEAD CYLINDER ASSY.	1	
26	127001000180	气缸体	CYLINDER COMP	1	
27	127001000190	气缸体密封垫	GASKET CYLINDER	1	
28	127001000200	排气管双头螺栓M8×40	DOUBLE END STUDS M8×40	2	
29	GB29.2-88.0610	十字槽六角螺栓M6×10	CROSS RECESSED HEXAGON BOLTS M6×10	1	
30	127001000210	垫圈φ6.2×φ11.2×1（紫铜）	WASHERS φ6.2×φ11.2×1（PURPLE COPPER）	1	
31	127001000220	气缸B螺栓M8X244	CYLINDER B BOLT M8X244	2	

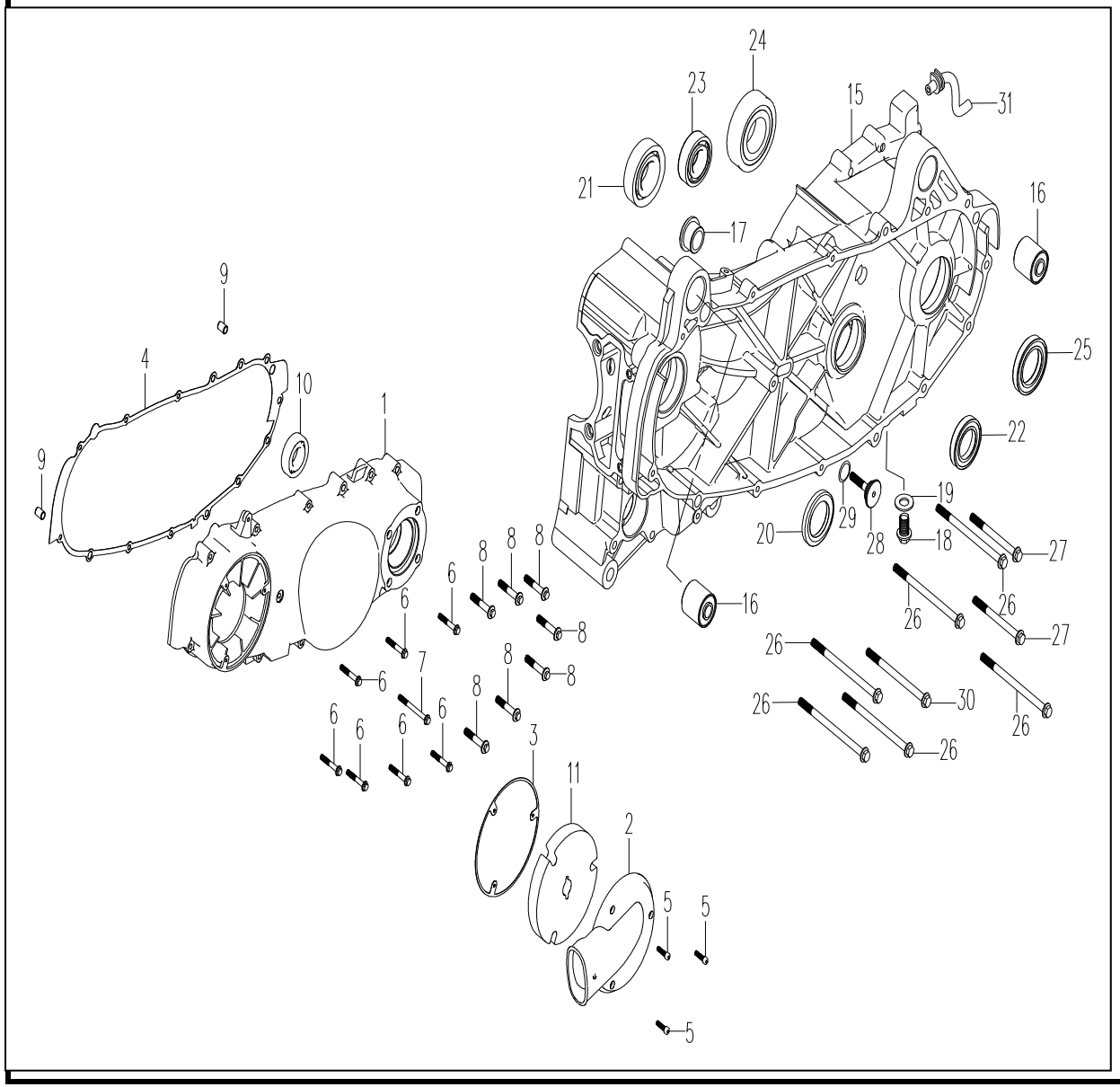
24
23
15
31
21
16
17
9
25
4
10
1
22
9
19
29
28
20
18
27
8
8
8
6
26
26
16
8
27
26
7
8
6
8
8
30
26
6
6
6
6
8
26
26
3
11
2
5
5
5

E-2 箱体总成(1)---CRANKCASE ASSY(1)

序号 REF NO.	代号(PART NO.)	名称	DESCRIPTION	数量 REGD NO	备注 REMARK
1	127002010010	左曲轴箱盖	LEFT CRANKCASE COVER	1	
2	127002010020	左曲轴箱盖进气口	INTAKE PORT LEFT CRANKCASE COVER	1	
3	127002010030	左曲轴箱盖进气口垫片	WASHER INTAKE PORT	1	
4	127002010040	左曲轴箱盖密封垫	GASKET LEFT CRANKCASE COVER	1	★
5	GB/T70.1-2000.0520	螺钉M5X20	SCREW M5X20	3	
6	127002010050	六角法兰螺栓M6X40	HEXAGON FLANGE BOLTS M6X40	7	
7	127002010060	六角法兰螺栓M6X65	HEXAGON FLANGE BOLTS M6X65	1	
8	127002010070	六角法兰螺栓M8X45	HEXAGON FLANGE BOLTS M8X45	7	
9	156FMI.4-9	定位销10X14	PIN DOWEL 10X14	2	
10	GB/T276-1994	滚动轴承6205-2LS	BEARING 6205-2LS	1	
11	127002010090	滤芯	CENTER FILTER	1	★★
15	127002021000	左曲轴箱部件	LEFT CRANKCASE COVER	1	
16	122102022010	前减震器套分组件	REAR BUMPER COVER	1	
17	GB/T2685-1981.16G72214	轴承16G7X22X14	BEARING 16G7X22X14	1	
18	127002020030	放油螺栓 M10X1.25	BOLT M10X1.25	1	
19	127002020040	垫片10.3x20.5x1.5	WASHER 10.3x20.5x1.5	1	
20	127002020050	油封30X45X5	OIL SEAL 30X45X5	1	
21	GB276-94.6205	滚动轴承6205	BEARING 6205	1	
22	127002020060	油封25X42X7	OIL SEAL 25X42X7	1	
23	GB276-94.6004	滚动轴承6004	BEARING 6004	1	

E-2 箱体总成(1)---CRANKCASE ASSY(1)

序号 REF NO.	代号(PART NO.)	名称	DESCRIPTION	数量 REGD NO	备注 REMARK
24	GB276-94.6206-LS	滚动轴承6206-LS	BEARING 6206-LS	1	
25	127002020070	油封30X47X7	OIL SEAL 30X47X7	1	
26	127002020080	六角法兰螺栓 M6X100	HEXAGON FLANGE BOLTS M6X100	6	
27	127002020090	六角法兰螺栓 M6X70	HEXAGON FLANGE BOLTS M6X70	4	
28	127002020100	涨紧板定位螺栓	BOLT TENSIONER	1	
29	127002020110	O形圈14.5X1.9	O-RING 14.5X1.9	1	
30	127002020120	六角法兰螺栓 M6X90	HEXAGON FLANGE BOLTS M6X90	1	
31	122411000006	后齿轮箱通气管组件	PIPE INTAKE REAR GEAR CASE	1	

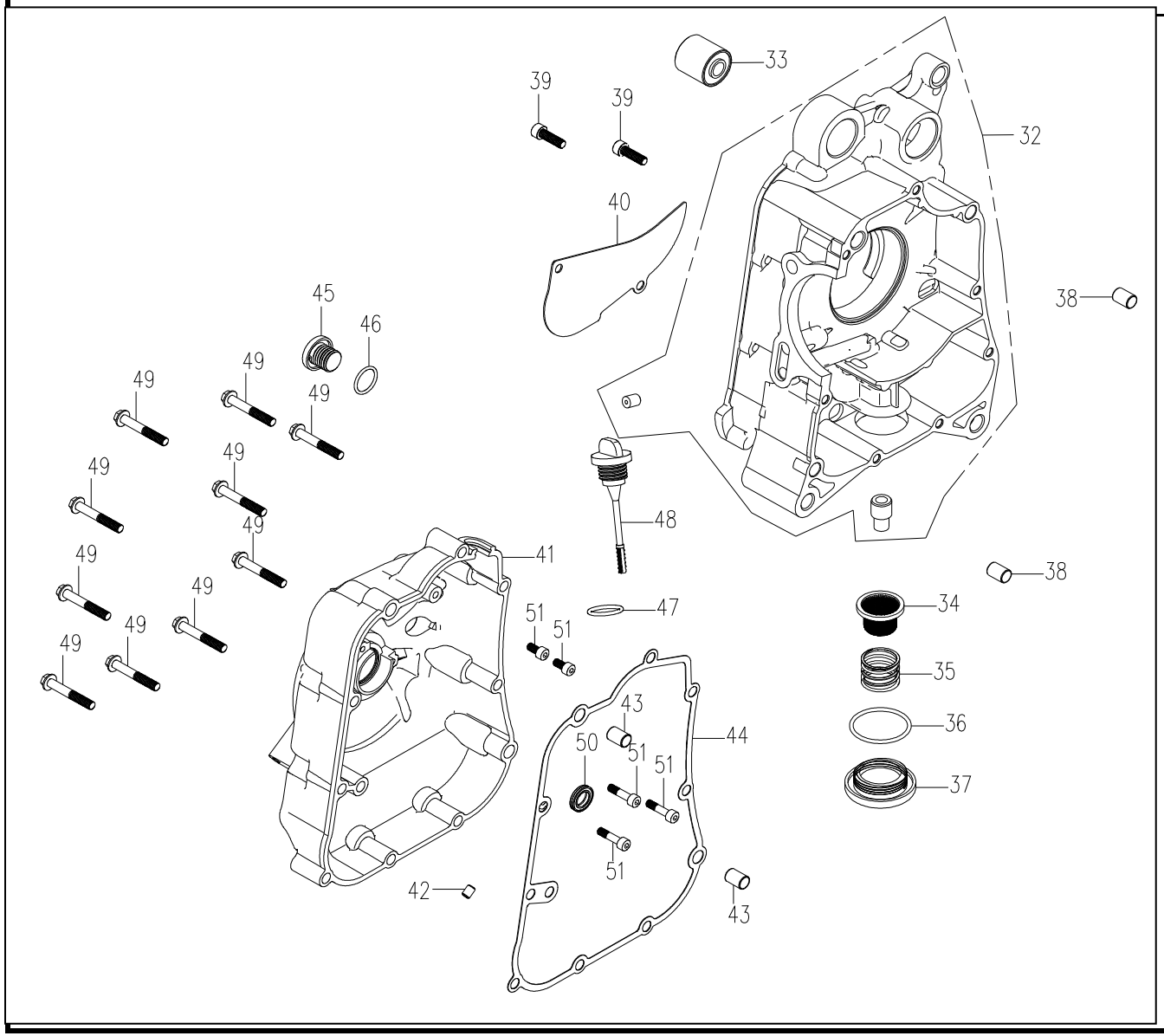
33
39
39
32
40
38
45
46
49
49
49
49
49
49
49
49
49
49
49
48
41
38
47
34
51
51
35
43
36
44
50
51
51
37
51
42
43

E-2 箱体总成(2)---CRANKCASE ASSY(2)

序号 REF NO.	代号(PART NO.)	名称	DESCRIPTION	数量 REGD N	备注 REMARK
32	127002031000	右曲轴箱部件	RIGHT CRANKCASE COVER	1	
33	135201010200	前减震器套分组件	FRONT BUMPER COVER	1	借用
34	127002032000	机油滤网部件	OIL FILTER	1	
35	127002030030	机油滤网弹簧	SPRING OIL FILTER	1	
36	127002030040	O形圈36X3.5	O-RING 36X3.5	1	
37	127002030050	螺盖M36X1.5	COVER BOLT M36X1.5	1	
38	156FMI.4-9	定位销10X14	PIN DOWEL 10X14	2	
39	127002030060	内六角螺钉M6X10	HEXAGON SOCKET SCREWS M6X10	2	
40	127002030070	油泵盖板	COVER OIL PUMP	1	
41	127002040010	右曲轴箱盖	RIGHT CRANKCASE COVER	1	
42	127002040020	堵头	HEAD PLUG	1	
43	156FMI.4-9	定位销10X14	PIN DOWEL 10X14	2	
44	127002040030	右曲轴箱盖垫	GASKET RIGHT CRANKCASE COVER	1	★
45	127002040040	螺塞M16X1.5	BOLT PLUG M16X1.5	1	
46	127002040050	O形圈16X2.3	O-RING 16X2.3	1	
47	127002040060	O形圈18X2.5	O-RING 18X2.5	1	
48	127002040070	机油标尺	GAUGE OIL LEVEL	1	
49	127002010050	六角法兰螺栓M6X40	HEXAGON FLANGE BOLTS M6X40	10	
50	127002041000	油封14X27X6	OIL SEAL 14X27X6	1	
51	GB70-85	内六角螺钉M5X22	HEXAGON SOCKET SCREWS M5X22	3	
52	GB70-85	内六角螺钉M5X10	HEXAGON SOCKET SCREWS M5X10	2	

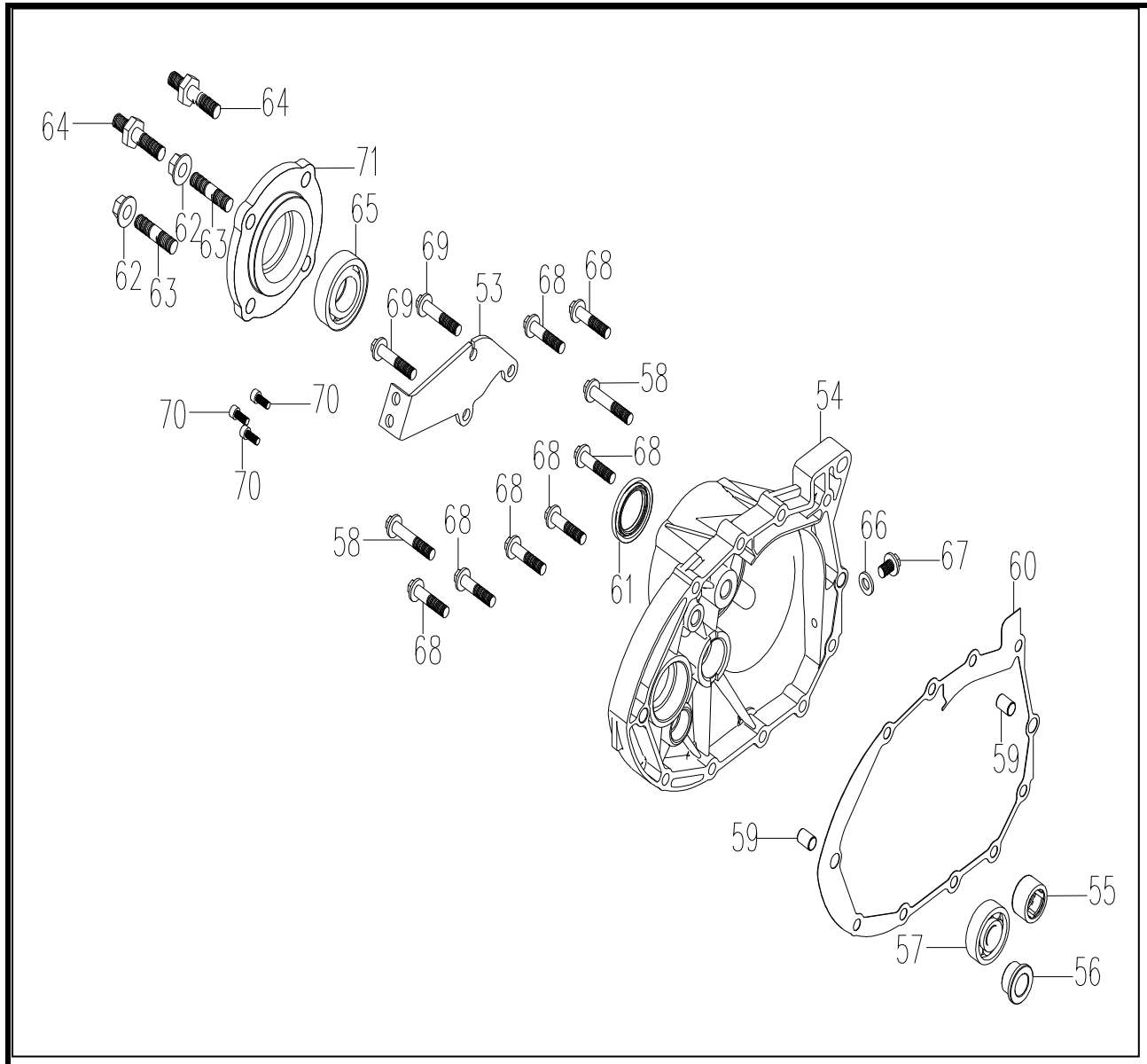
64
64
71
62
63
65
62
63
69
69
53
68
68
58
54
70
70
70
68
68
68
68
58
68
66
67
61
60
68
59
59
55
57
56

E-2 箱体总成(3)---CRANKCASE ASSY(3)

序号 REF NO.	代号(PART NO.)	名称	DESCRIPTION	数量 REGD N	备注 REMARK
53	127002050010	拉线支架	CABLE SHELF	1	
54	127002050020	后齿轮箱盖	REAR GEAR CASE COVER	1	
55	GB290-98.HKH2016	轴承HKH2016	BEARING HKH2016	1	
56	GB2685-81.16G72214	轴承16G7X22X14	BEARING 16G7X22X14	1	
57	GB276-94.6302	轴承6302	BEARING 6302	1	
58	127002050030	螺栓M8X45	BOLT M8X45	2	
59	156FMI.4-9	定位销10X14	PIN DOWEL 10X14	2	
60	127002050040	后齿轮箱盖垫片	WASHER REAR GEAR CASE COVER	1	★
61	127002020050	油封35X45X5	OIL SEAL 35X45X5	1	
62	GB/T 6177.2	螺母M10X1.25	NUTS M10X1.25	2	
63	127002010080	双头螺柱M10X43（两端18）	DOUBLE END STUDS M10X43（18）	2	
64	127002050100	双头螺柱M10X53（两端18）	DOUBLE END STUDS M10X53（18）	1	
65	GB276-94.6205-2LS	滚动轴承6205-2LS	BEARING 6205-2LS	1	
66	127002050060	垫圈8	WASHER 8	1	
67	GB16674-96.0812	螺栓M8X12	BOLT M8X12	1	
68	127002050070	螺栓M8X35	BOLT M8X35	7	
69	127002050080	螺栓M8X40	BOLT M8X40	2	
70	GB70.1-2000.0513	螺钉M5X13	SCREW M5X13	3	
71	127002050090	轴承盖	COVER BEARING	1	

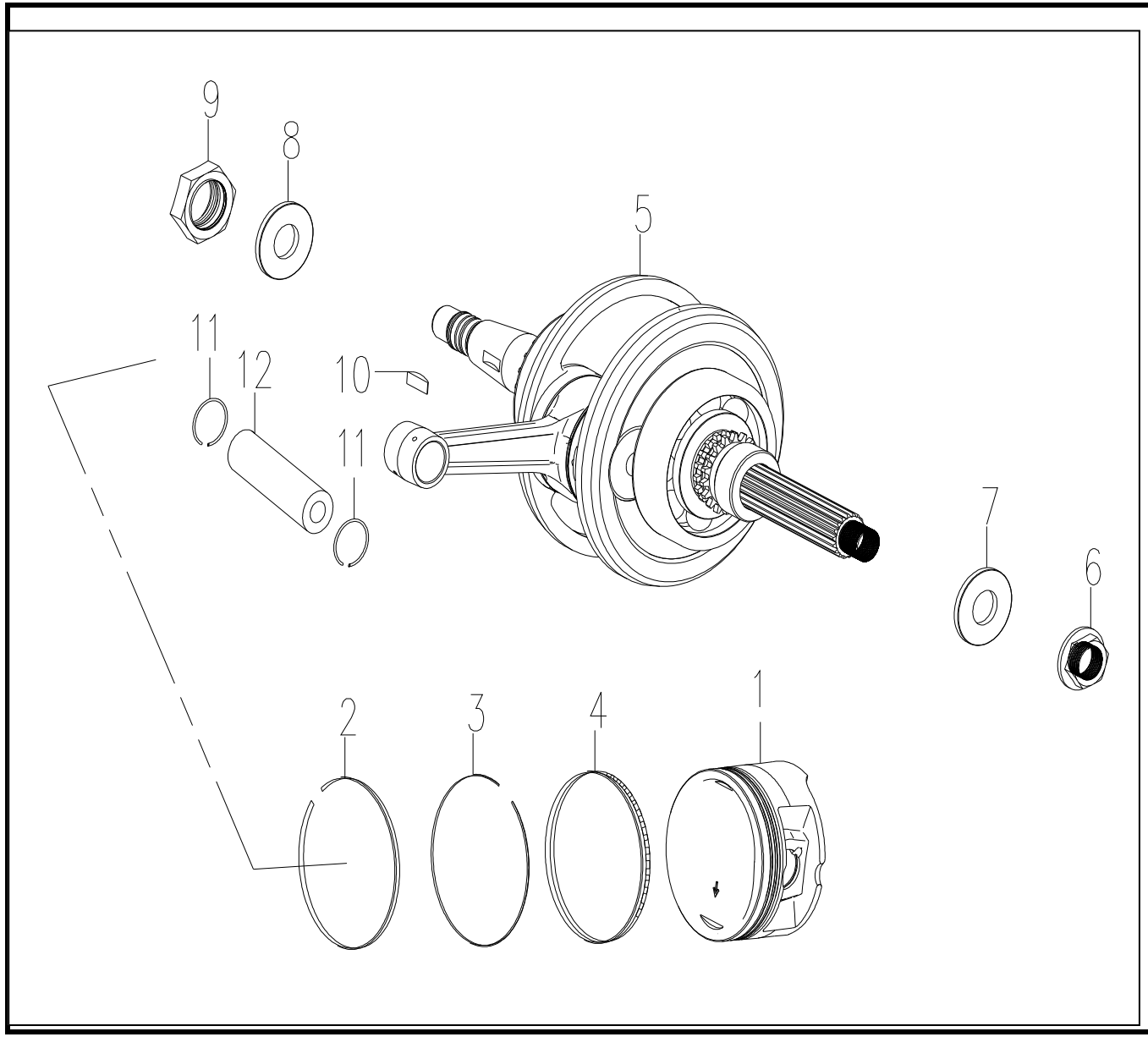
9
8
5
11
12
10
11
7
6
2
3
4
1

E-3 曲轴连杆总成---CRANKSHAFT.PISTON ASSY

序号 REF NO.	代号(PART NO.)	名称	DESCRIPTION	数量 REGD N	备注 REMARK
1	127003000010	活塞	PISTON (STD)	1	★★
2	127003000020	一环	PISTON RING 1	1	★★
3	127003000030	二环	PISTON RING 2	1	★★
4	127003010000	组合油环	PISTON OIL RING	1	★★
5	127003020000	曲轴、连杆组件	CRANKSHAFT COMP	1	
6	127003000040	法兰螺母M14X1	NUTS FLANGE M14X1	1	
7	127011000020	平垫圈14.2X32X3	PLAIN WASHERS 14.2X32X3	1	通用
8	127003000050	平垫圈16.5X27X3	PLAIN WASHERS 16.5X27X3	1	
9	127003000060	六角螺母M16X1	HEXAGON NUTS M16X1	1	4
10	127003000070	半圆键5	KEY WOODRUFF 5	1	
11	127003000080	活塞销卡簧	CLIP PISTON PIN	2	
12	127003000090	活塞销	PIN PISTON	1	

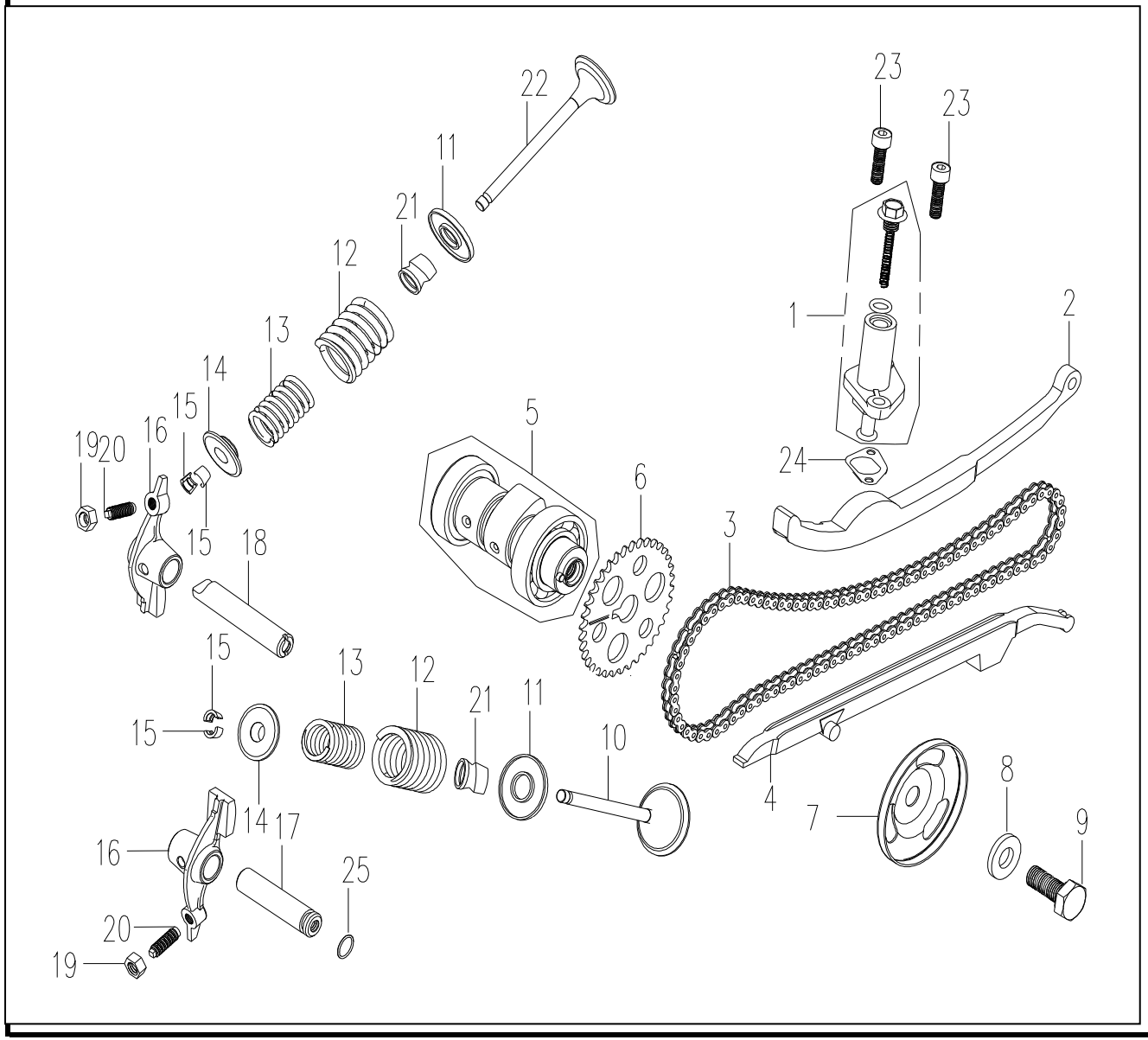
22
23
23
11
21
12
1
2
13
14
15
5
19
20
16
24
6
3
15
18
15
13
12
21
11
10
15
14
17
16
25
20
19
4
7
8
9

E-4 配气机构总成---CAMSHAFT . VALVE TENSIONER ASSY

序号 REF NO.	代号(PART NO.)	名称	DESCRIPTION	数量 REGD N	备注 REMARK
1	127004010000	涨紧器组件	TENSIONER COMP	1	★
2	127004020000	涨紧杆部件	POLE TENSIONER	1	★
3	127004030000	正时链条C2-5X104L	CHAIN CAM C2-5X104L	1	★
4	127004040000	链条倒向板	GUIDE COMP CAM CHAIN	1	★
5	127004050000	凸轮轴组件	CAMSHAFT COMP	1	★
6	127004000010	正时从动链轮	DRIVEN GEAR CHAIN CAM	1	
7	127004000020	气缸头左盖挡油盘	OIL PLATE HEAD CYLINDER	1	
8	127004000030	垫圈10X22X3	PLAIN WASHERS 10X22X3	1	
9	127004000040	六角螺栓M10X1.25-25	HEXAGON BOLTS M10X1.25-25	1	
10	127004000050	排气门	VALVE EXHAUST	1	
11	127004000060	气门弹簧下座	SEAT VALVE SPRING OUTER	2	
12	127004000070	气门外弹簧	SPRING VALVE OUTER	2	
13	127004000080	气门内弹簧	SPRING VALVE INNER	2	
14	127004000090	气门弹簧座	RETAINER VALVE SPRING	2	
15	127004000100	气门锁夹	COTTER VALVE	4	
16	127004000110	气门摇臂	VALVE ROCKER ARM	2	
19	127004000180	摇臂螺母M6X0.75	NUTS ROCKER ARM M6X0.75	2	借用CG125
20	127004000190	摇臂螺栓M6X0.75-21	BOLTS ROCKER ARM M6X0.75-21	2	借用CG125
17	127004000120	排气门摇臂轴	SHAFT EXHAUST ROCKER ARM	1	
18	127004000130	进气门摇臂轴	SHAFT INTAKE ROCKER ARM	1	

E-4 配气机构总成---CAMSHAFT . VALVE TENSIONER ASSY

序号 REF NO.	代号(PART NO.)	名称	DESCRIPTION	数量 REGD N	备注 REMARK
21	127004060000	气门油封	OIL SEAL VALVE	2	
22	127004000140	进气门	VALVE INTAKE	1	
23	127004000150	内六角螺钉M6X13	HEXAGON SOCKET SCREWS M6X13	2	
24	127004000160	涨紧器密封垫	GASHET TENSIONER	1	
25	127004000170	O形圈8.7X1.9	O-RING 8.7X1.9	1	

E-7

磁电机点火

GENERATOR A

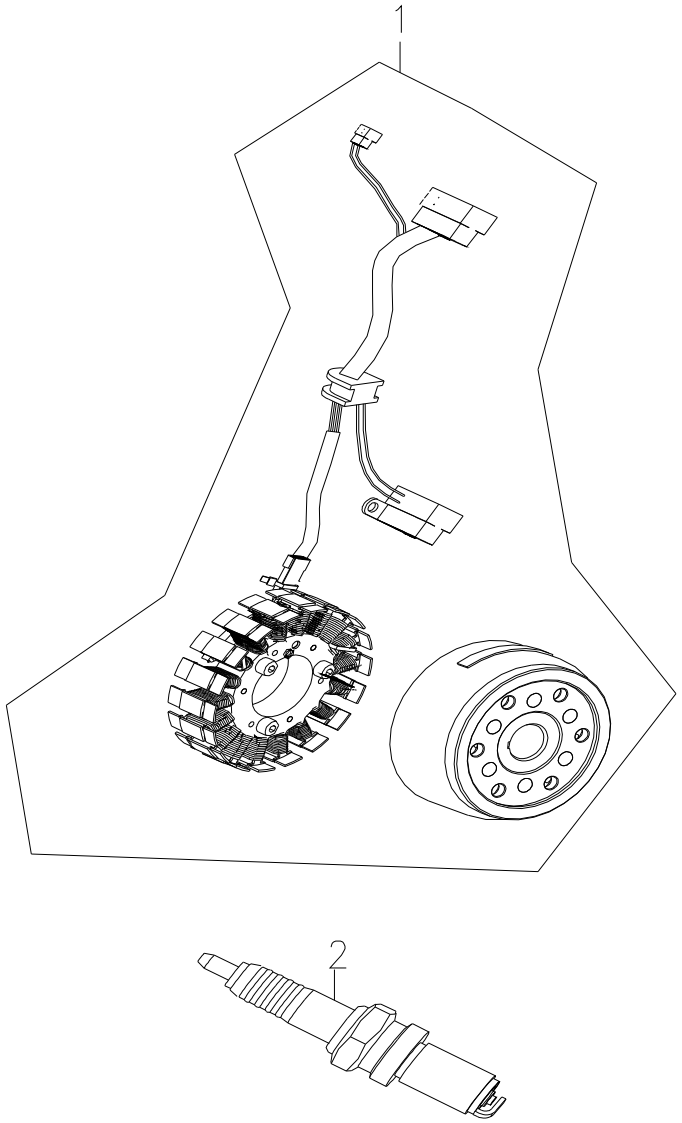

E-7 磁电机点火机构总成---GENERATOR ASSY

序号 REF NO.	代号(PART NO.)	名称	DESCRIPTION	数量 REGD N	备注 REMARK
1	127004030000	磁电机分总成	MAGNETO	1	★
2	127004040000	火花塞DR8EA	SPARKING PLUG DR8EA	1	借用★★

E-8

水泵总成

WATER PUM

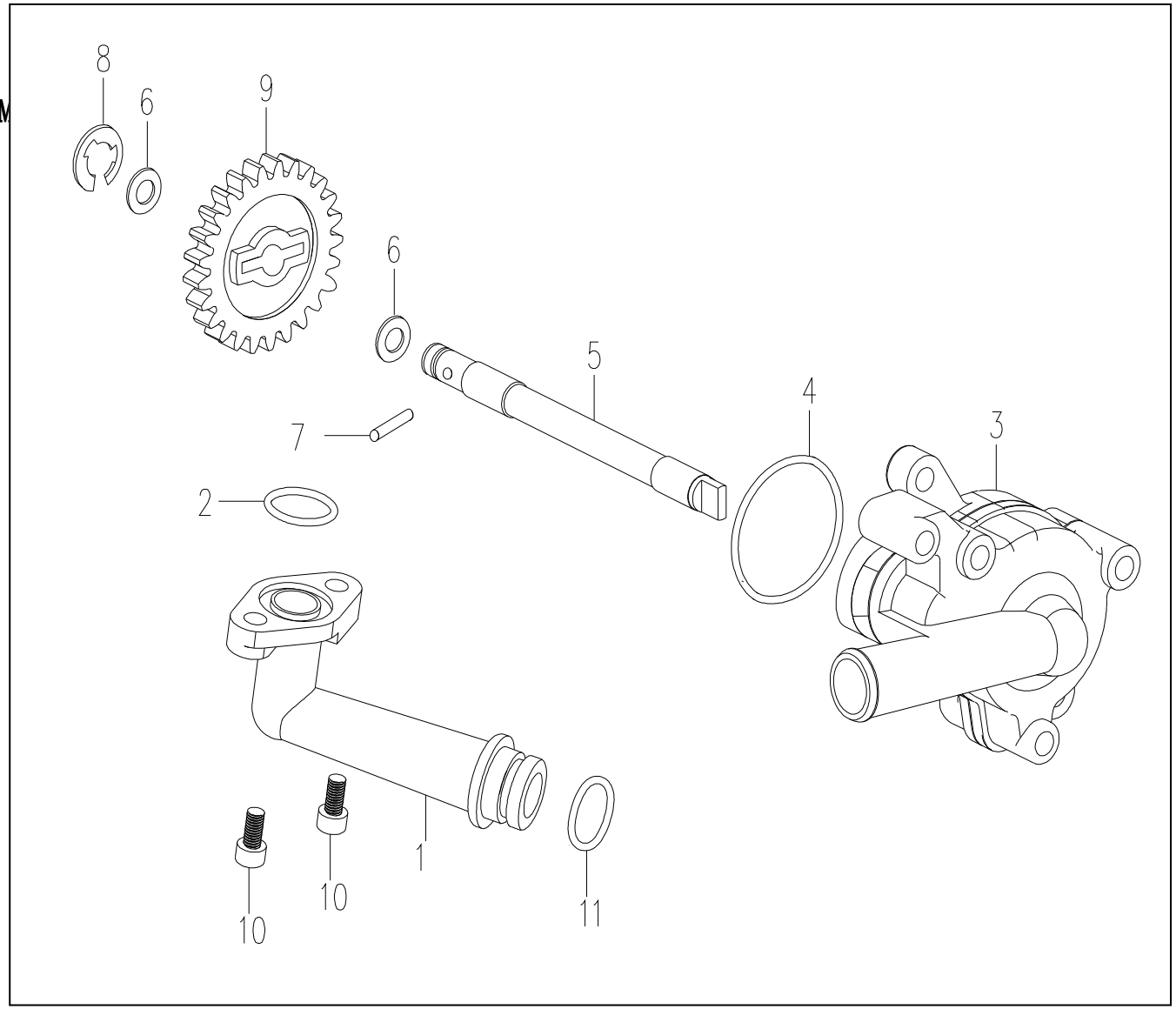

E-8 水泵总成---WATER PUMP ASSY

序号	代号(PART NO.)	名称	DESCRIPTION	数量	备注
REF NO.				REGD N	REMARK
1	127009000010	回水弯管	BEND TUBE RETURN WATER	1	
2	127009000020	O形圈15X2.5	O-RING 15X2.5	1	
3	127009010000	水泵组件	WATER PUMP COMP	1	
4	127009000030	O形圈33.5X2.6	O-RING 33.5X2.6	1	★★
5	127009000040	水泵驱动轴	DRIVE SHAFT WATER PUMP	1	
6	127009000050	平垫圈8.3X15X1	PLAIN WASHERS 8.3X15X1	2	
7	127009000060	限位销	PIN DOWEL	1	
8	127009000070	开口挡圈7	“ E”RINGS 7	1	
9	127009000080	水泵驱动齿轮	DRIVE GEAR WATER PUMP	1	
10	127009000090	内六角螺钉M6X18	HEXAGON SOCKET SCREWS M6X18	2	
11	127009000100	O形圈15.8X2.4	O-RING 15.8X2.4	1	

E-9
CVT总成
CVT

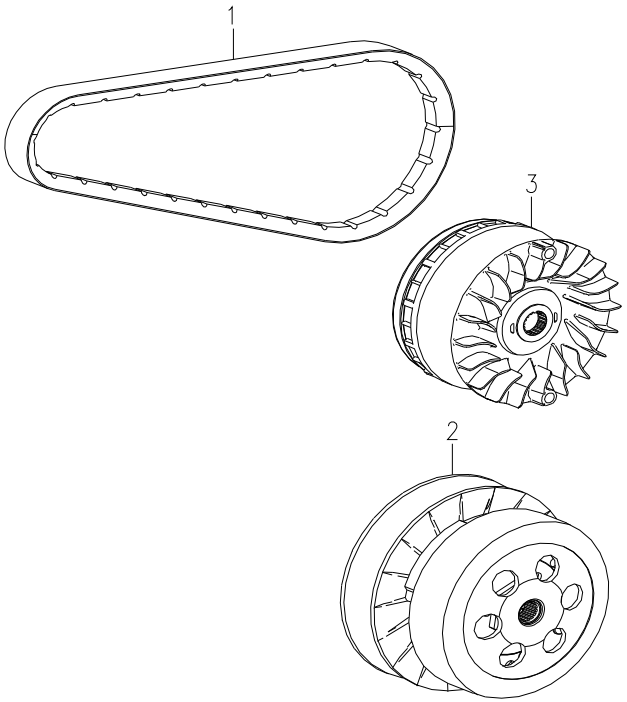

E-9 CVT总成

序号 REF NO.	代号(PART NO.)	名称	DESCRIPTION	数量 REGD N	备注 REMARK
1	127010000010	皮带	BELT DRIVE	1	★
2	127010010000	从动轮组件	DRIVEN PULLEY COMP	1	
3	127010020000	主动轮组件	DRIVE PULLEY COMP	1	

E-10

后传动总成

TRANSMISSION

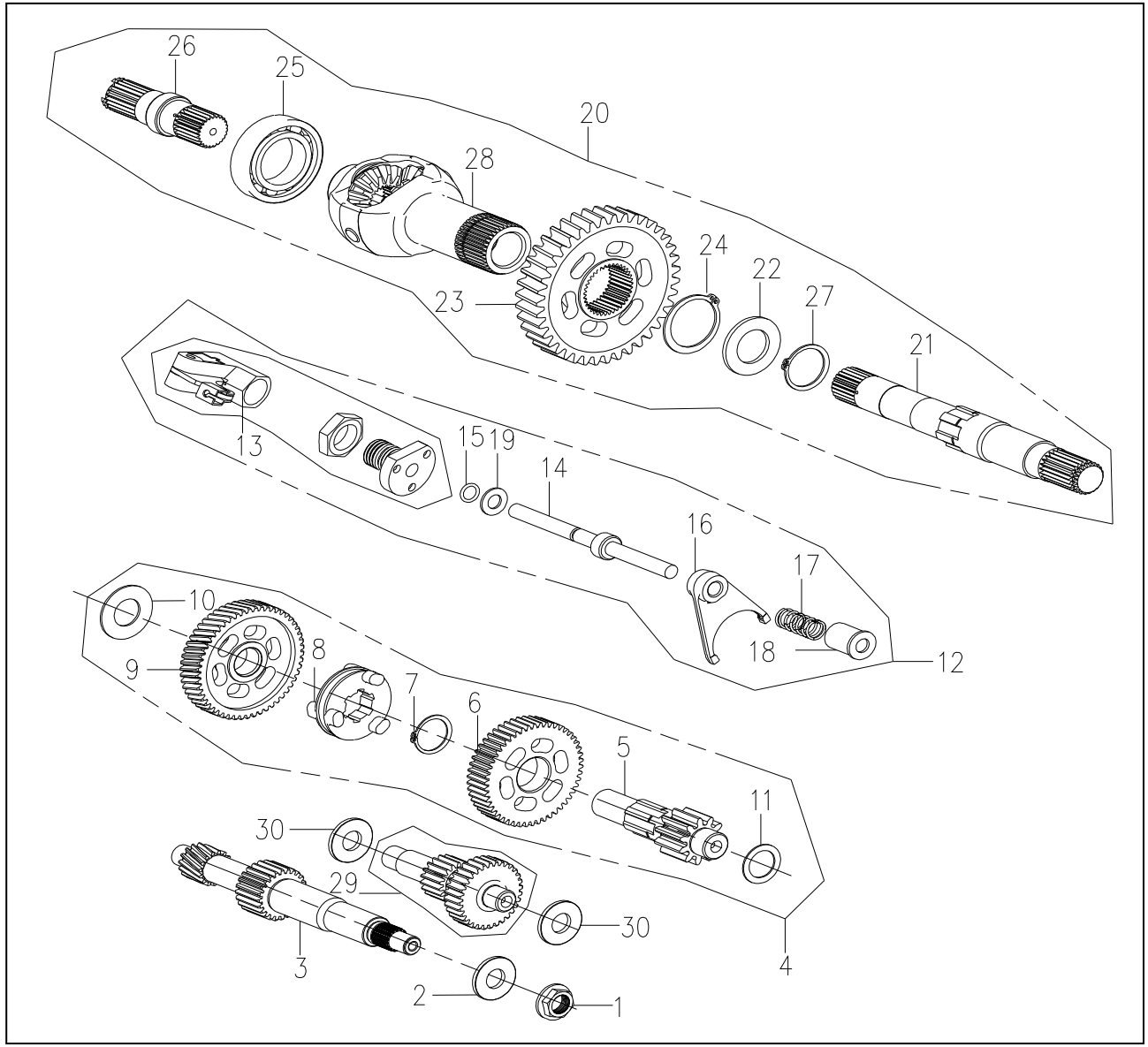

E-10 后传动总成---TRANSMISSION

序号 REF NO.	代号(PART NO.)	名称	DESCRIPTION	数量 REGD N	备注 REMARK
1	127011000010	离合器螺母M14X1	NUTS CLUTCH M14X1	1	
2	127011000020	平垫圈14X32X3	PLAIN WASHERS 14X32X3	1	
3	127011000030	主轴	MAIN SHAFT	1	
4	127011010000	中间轴组件	MIDDLE SHAFT COMP	1	
5	127011010010	中间齿轮轴	SHAFT MIDDLE GEAR	1	
6	127011010020	倒档齿轮	REVERSE GEAR	1	
7	GB/T894.1	挡圈 25	CIRCLIPS FOR SHAFT 25	1	
8	127011010030	倒档执行盘	REVERSE PLATE	1	
9	127011010040	中间齿轮	MIDDLE GEAR	1	
10	127011010050	平垫圈20.2X29X1.5	PLAIN WASHERS 20.2X29X1.5	1	
11	127011010060	平垫圈20X29X1	PLAIN WASHERS 20X29X1	1	
12	127011020000	倒档操纵机构	REVERSE CONTROL MECHANISM	1	
13	127011021000	摇板组件	ROCKER ARM COMP	1	
14	127011020010	拨叉轴	SHAFT FORK	1	
15	GBGB/T3452.1-1992	O型圈6.9X1.8	O-RING 6.9X1.8	1	
16	127011020020	拨叉	FORK	1	
17	127011020030	倒挡拨叉弹簧	SPRING REVERSE FORK	1	
18	127011022000	定位套	BUSHING POSITIONER	1	
19	127011020040	平垫圈10.3X20X1.5	PLAIN WASHERS 10.3X20X1.5	1	
20	127011030000	差速器组件	DIFFERENTIAL GEAR COMP	1	

E-10　后传动总成---TRANSMISSION

序号 REF NO.	代号(PART NO.)	名称	DESCRIPTION	数量 REGD N	备注 REMARK
21	127011030010	左轮轴	LEFT WHEEL SHAFT	1	
22	127011030020	限位垫	LIMITING WASHERS	1	
23	127011030030	差速器齿轮	DIFFERENTIAL GEARWHEEL	1	
24	GB8941-86.38	挡圈38	CIRCLIPS FOR SHAFT 38	1	
25	GB276-94.6007-LS	滚动轴承6007-LS	BEARING 6007-LS	1	
26	127011030080	右轮轴	SHAFT RIGHT WHEEL	1	
27	GB894.1-86.30	挡圈 30	CIRCLIPS FOR SHAFT 30	1	
28	127011033000	差速器	DIFFERENTIAL GEAR	1	
29	127011040000	倒档轴组件	REVERSE SHAFT COMP	1	
30	127011000040	平垫圈16X25X1.3	PLAIN WASHERS 16X25X1.3	2	

E-11

机油泵总成

OIL PUMP

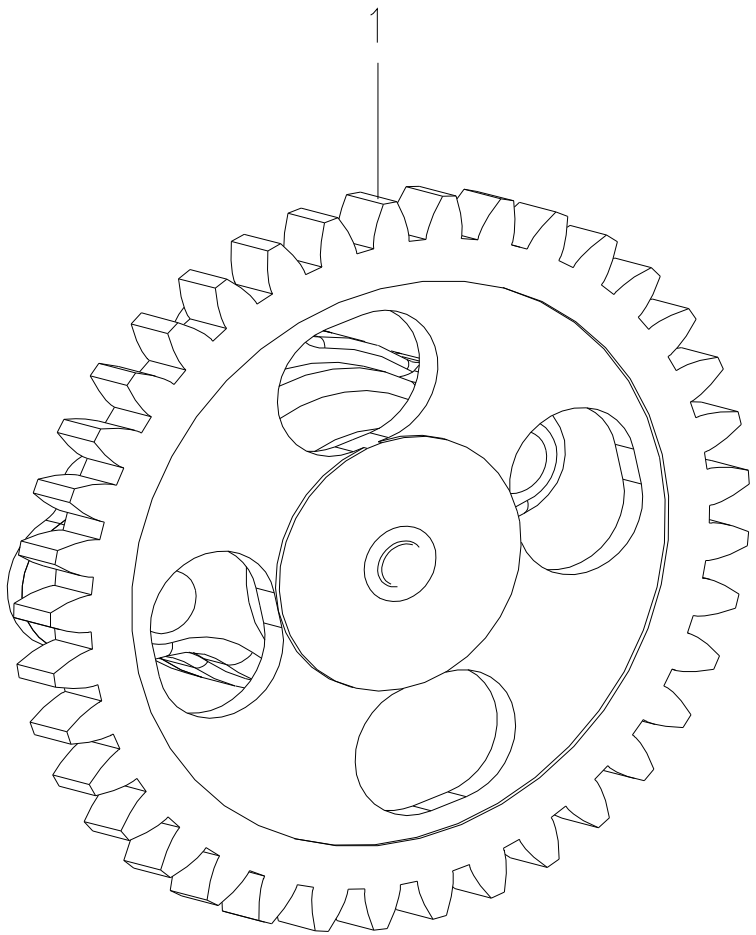

E-11 机油泵总成---OIL PUMP

序号 REF NO.	代号(PART NO.)	名称	DESCRIPTION	数量 REGD N	备注 REMARK
1	127012000000	机油泵组件	OIL PUMP COMP	1	

E-12

启动电机总成

STARTING

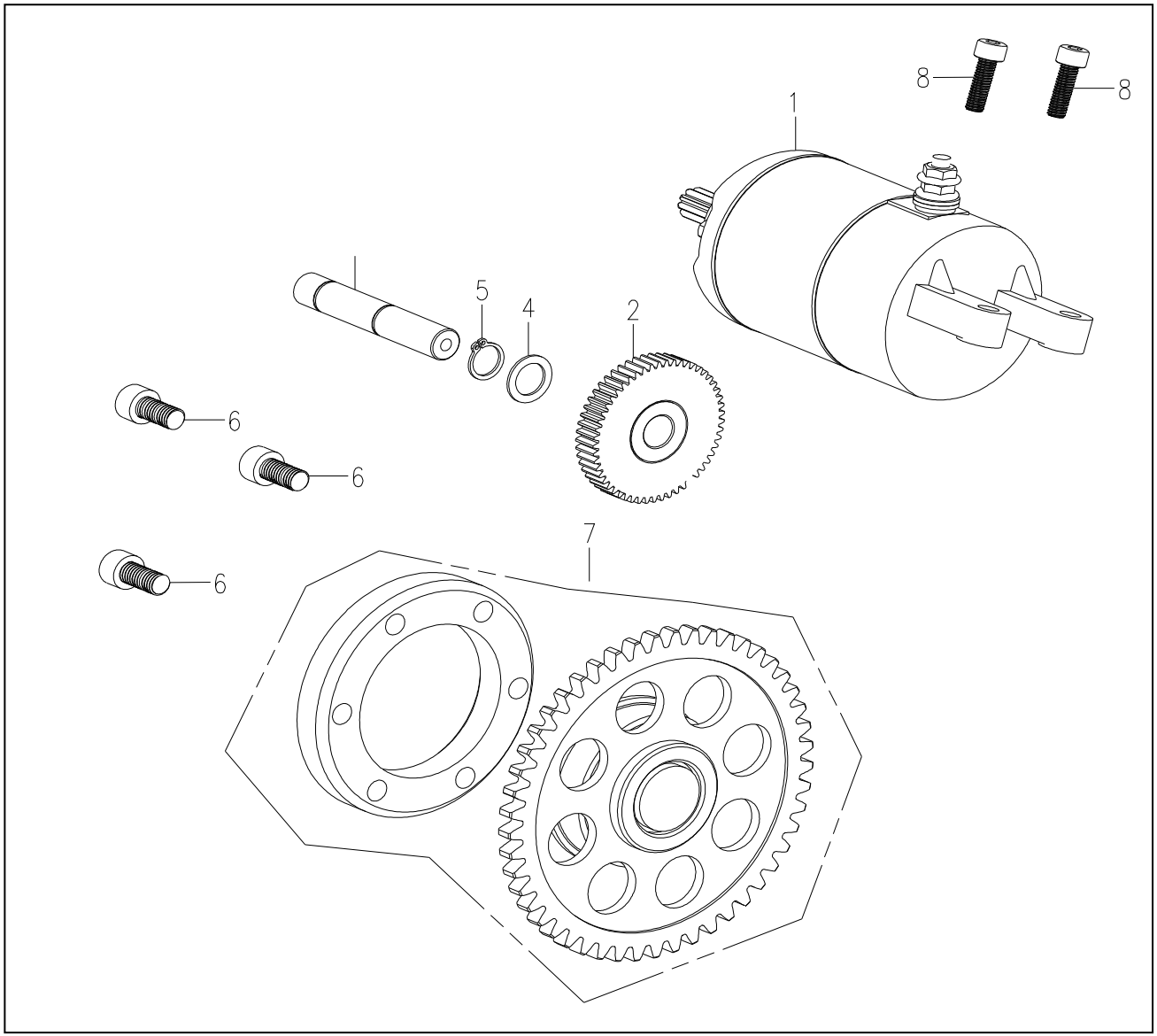

E-12 启动电机总成---STARTING

序号 REF NO.	代号(PART NO.)	名称	DESCRIPTION	数量 REGD N	备注 REMARK
1	127013010000	启动电机	MOTOR ASSY. STARTER	1	
2	127003020000	惰齿轮组件	GEAR COMP	1	
3	127003000010	惰齿轮轴	SHAFT GEAR	1	
4	127003000020	平垫圈12.1X18X1	PLAIN WASHERS 12.1X18X1	1	
5	GB894.1-86.12	轴用挡圈 12	CIRCLIPS FOR SHAFT 12	1	
6	GB70-85.0816	内六角螺钉M8X16	HEXAGON SOCKET SCREWS M8X16	3	
7	127003030000	启动单向离合器	STARTING CLUTCH	1	
8	127001000120	内六角螺栓M6X25	HEXAGON SOCKET SCREWS M6X25	2	

F-1

车架、发动机系统

FRAME、ENGING SYSTEM

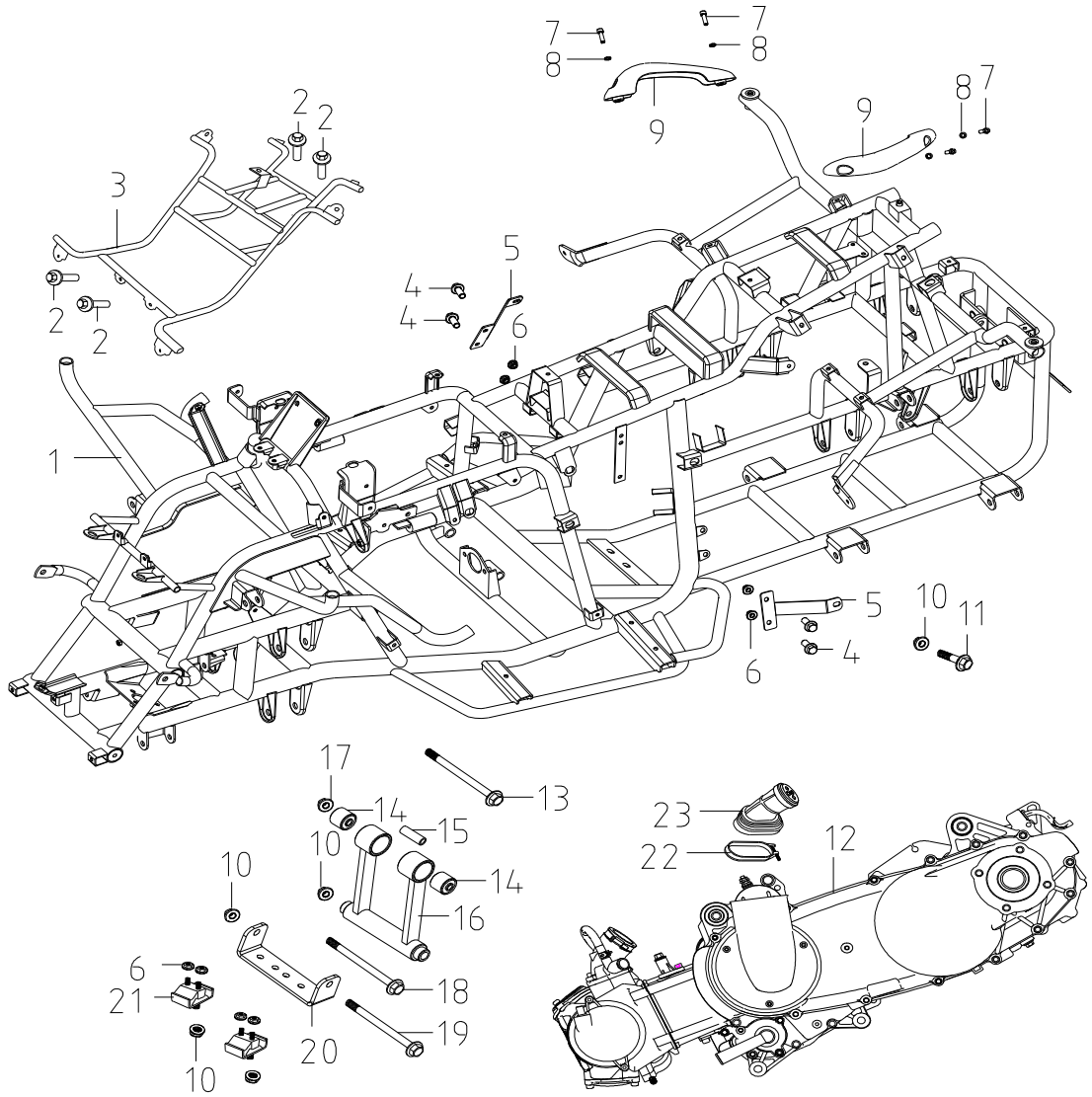

F-1 车架、发动机系统---FRAME、ENGING SYSTEM

序号 REF NO.	代号(PART NO.)	名称	DESCRIPTION	数量 REGD N	备注 REMARK
1	357102000000	车架总成	BODY FRAME ASSY	1	
2	GB/T16674-1996	六角法兰面螺栓M6x16	HEXAGONAL BOLT FLANGE M6*16	4	
3	357150000000	头罩支架	HEAD COVER HOLDER	1	
4	GB/T16674-1996	六角法兰面螺栓M8x16	HEXAGONAL BOLT FLANGE M8*16	4	
5	357102000890	后轮罩支承板	REAR WHEEL COVER INSTALLATION PANEL	2	
6	GB/T6187.1-2000	全金属六角法兰面锁紧螺母M8	ALL-METAL SELF-LOCK HEXAGONAL NUT FLANGE M6	8	
7	GB/T70.1-2000	内六角螺钉M8x30	INNER HEXAGONAL SCREW M8*30	2	
8	GB/T93-1987	弹簧垫圈8	SPRING WASHER 8	2	
9	357100000590	扶手	ARMREST	2	
10	GB/T6187.2-2000	全金属六角法兰面锁紧螺母M10x1.25	ALL-METAL SELF-LOCK HEXAGONAL NUT FLANGE M10*1.25	5	
11	GB/T16674-1996	六角法兰面螺栓M10x1.25x65	HEXAGONAL BOLT FLANGE M10*1.25*65	1	
12	357115010000	发动机	ENGINE	1	
13	357100000710	发动机上吊挂安装轴M12x1.25x142	ENGINE UP HANG AXLE	1	
14	345011020050	缓冲套φ30xφ12.3x30/34.5	CUSHION BUSHφ30xφ12.3x30/34.5	2	
15	357111000020	摇架衬套	SWING RACK LINING COVER	1	
16	357111031500	发动机上吊挂	ENGINE UP HANG	1	
17	GB/T6187.2-2000	全金属六角法兰面锁紧螺母M12x1.25	ALL-METAL SELF-LOCK HEXAGONAL NUT FLANGE M12*1.25	5	
18	357100000730	发动机上安装轴M10x1.25x225	ENGINE UP INSTALLATION AXLE	1	
19	357100000740	发动机下安装轴M10x1.25x155	ENGINE DOWN INSTALLATION AXLE	1	
20	357100000700	发动机下支承	ENGINE DOWN INSTALLATION PANEL	1	
21	346023000000	发动机缓冲垫	ENGINE CUSHION BUSH	2	

F-1 车架、发动机系统---FRAME、ENGING SYSTEM

序号 REF NO.	代号(PART NO.)	名称	DESCRIPTION	数量 REGD N	备注 REMARK
22	357115010020	冷风管卡箍	CLAMP BOOT	1	
23	357115010010	冷风管	BOOT SIDE CASE	1	
	GB/T16674-1996	六角法兰面螺栓M8x20	HEXAGONAL BOLT FLANGE M8*20	4	
	357150000810	左脚保护杠	LEFT PROTECTION BAR	1	
	357150000820	右脚保护杠	RIGH PROTECTION BAR	1	

F-2

转向系统

STEERING SYSTEM

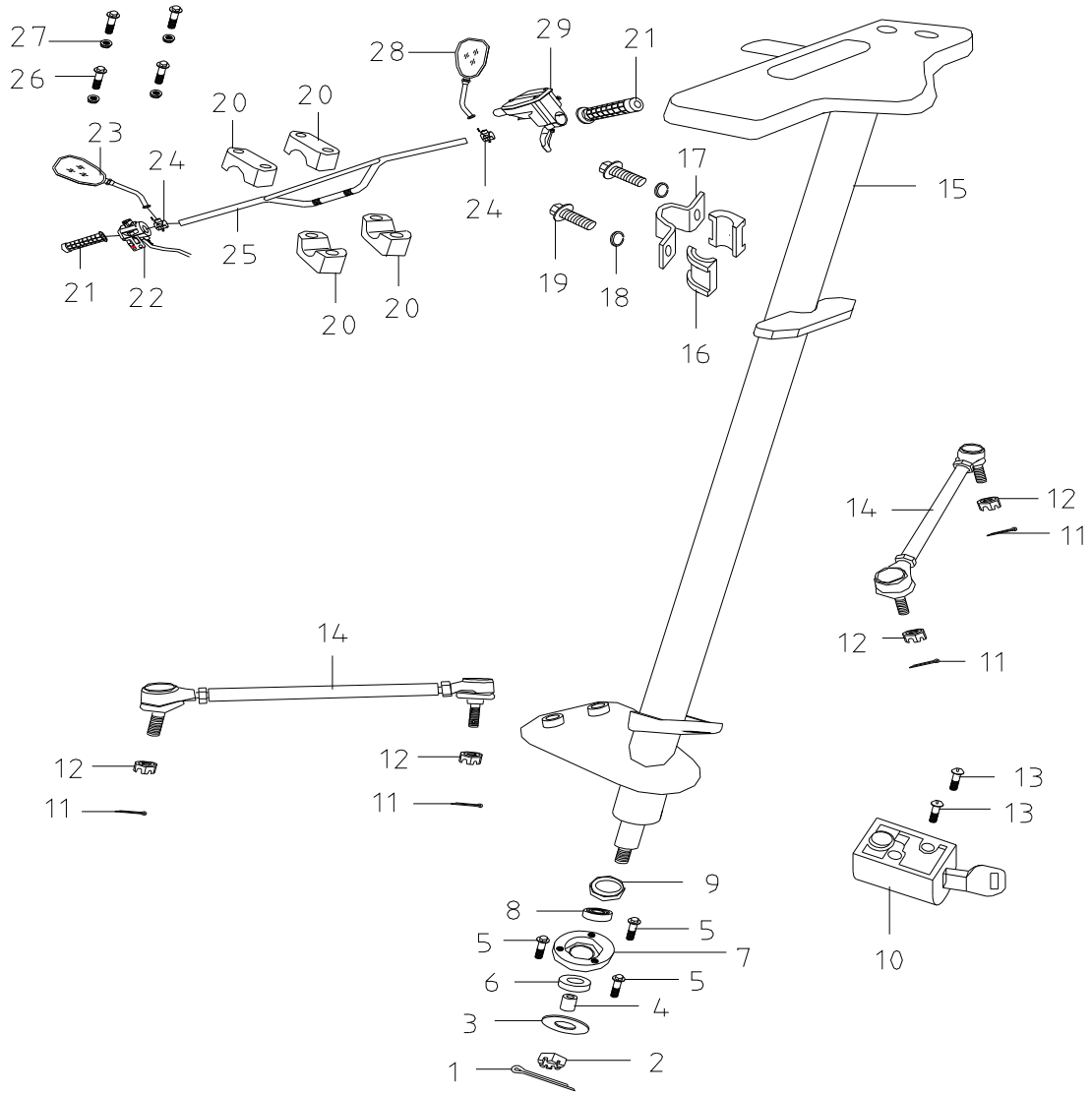

F-2 转向系统---STEERING SYSTEM

序号 REF NO.	代号(PART NO.)	名称	DESCRIPTION	数量 REGD N	备注 REMARK
1	GB/T91-2000	开口销 2.5×32	COTTER PIN 2.5*32	1	
2	GB/T9459-1988	开槽薄螺母M16x1.5	SLOTTED THIN NUT M16*1.5	1	
3	GB/T97.1-2002	垫圈16	WASHER 16	1	
4	357106000030	方向柱安装衬套	STEERING COLUMN INSTALLATION LINING COVER	1	
5	GB/T16674-1996	六角法兰面螺栓M8×40	HEXAGONAL BOLT FLANGE M8*40	3	
6	GB/T13871-1992	内包骨架油封25x37x6	INNER FRAMED OIL SEAL 25*37*6	1	
7	357106000040	轴承座	BEARING SEAT	1	
8	GB/T276-1994	轴承6004	BEARING 6004	1	
9	GB/T13871-1992	内包骨架油封30x42x6	INNER FRAMED OIL SEAL 30*42*6	1	
10	345043000000	转向锁	STEERING LOCK	1	
11	GB/T91-2000	开口销 2.2×32	COTTER PIN 2.5*45	4	
12	GB/T9459-1988	开槽螺母M12x1.25	SLOTTED NUT M12*1.25	4	
13	GB/T819.2-1997	十字槽沉头螺钉M6x10	CROSS SLOTTED IMMERSED-HEAD SCREWM6*1(	2	
14	357106030000	转向拉杆组件	STEERING DRAW BAR ASSY	2	
15	357106020000	转向立柱组合	STEERING COLUMN ASSY	1	
16	357106000020	方向柱安装胶套	STEERING COLUMN INSTALLATION PLASTIC (	2	
17	357106000010	方向柱夹	STEERING COLUMN CLIP	1	
18	GB/T93-1987	弹簧垫圈8	WASHER 8	2	
19	GB/T16674-1996	六角法兰面螺栓M8×20	HEXAGONAL BOLT FLANGE M8*40	2	
20	353100000040	手把管压块	HANDLE TUBE CHUNK	4	

F-2 转向系统---STEERING SYSTEM

序号 REF NO.	代号(PART NO.)	名称	DESCRIPTION	数量 REGD N	备注 REMARK
21	353100000050	手把套	STEERING BAR COVER	2	
22	355309010000	闸把开关	BRAKE HANDLE SWITCH	1	
23	355319010000	左后视镜(M10x1.25)	LEFT REAR-VIEW MIRROR (M10*1.25)	1	
24	355300000200	后视镜安装座	REAE-VIEW MIRROR INSTALLATION SEAT	2	
25	357106011000	方向手把	STEERING BAR	1	
26	GB/T16674-1996	六角法兰面螺栓M8x55	HEXAGONAL BOLT FLANGE M8*55	4	
27	GB/T6187.1-2000	全金属六角法兰面锁紧螺母M8	ALL-METAL SELF-LOCK HEXAGONAL NUT FLANGE M8	4	
28	355319020000	右后视镜(M10x1.25)	RIGHT REAR-VIEW MIRROR (M10*1.25)	1	
29	354032000000	油门把座	THROTTLE BAR SEAT	1	
		后羊角拉杆组件	REAR SHEEP ANGLE PULL ROD COMPONENTS	1	

F-3

前摇架系统

FRONT SWING RACK SYSTEM

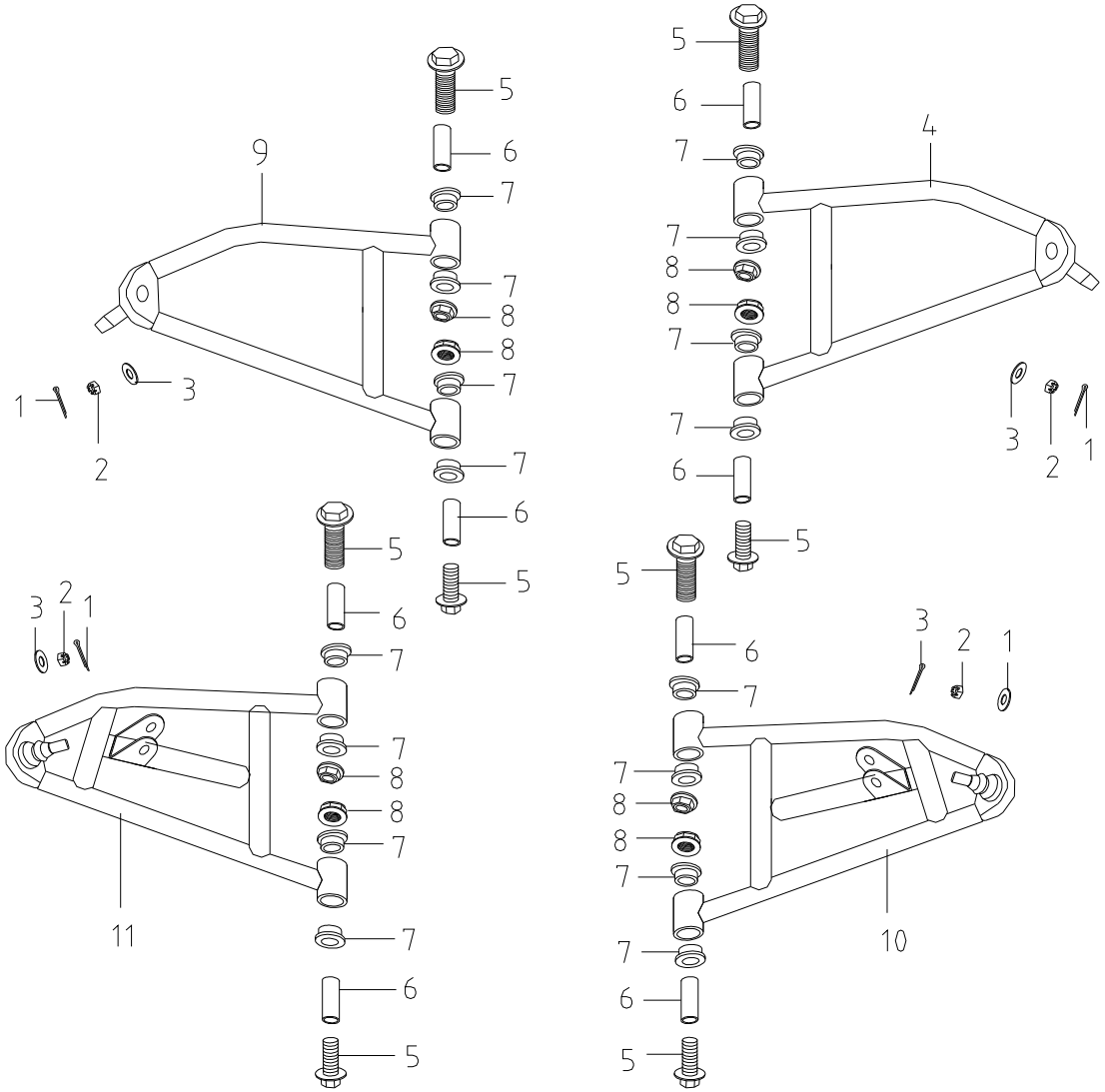

F-3 前摇架系统---FRONT SWING RACK SYSTEM

序号 REF NO.	代号(PART NO.)	名称	DESCRIPTION	数量 REGD N	备注 REMARK
1	GB/T91-2000	开口销 2.2×32	COTTER PIN 2.2*32	4	
2	GB/T9459-1988	开槽薄螺母M14x1.5	SLOTTED THIN NUT M14*1.5	4	
3	GB/T97.1-2002	垫圈14	WASHER 14	4	
4	357111012500	前右上摇架	FRONT RIGHT UPPER SWING RACK	1	
5	GB/T16674-1996	六角法兰面螺栓M12x1.25x75	HEXAGONAL BOLT FLANGE M12*1.25*75	8	
6	357111000020	摇架衬套φ18×φ12×50	SWING RACK LINING COVER	8	
7	357111000010	摇架尼龙套	SWING RACK NYLON COVER	16	
8	GB/T6187.2-2000	全金属六角法兰面锁紧螺母M12x1.25	ALL-METAL SELF-LOCK HEXAGONAL NUT FLANGE M12*1.25	8	
9	357111011500	前左上摇架	FRONT LEFT UPPER SWING RACK	1	
10	357111012600	前右下摇架	FRONT RIGHT LOWER SWING RACK	1	
11	357111011600	前左下摇架	FRONT LEFT LOWER SWING RACK	1	

F-4

前轮系统

FRONT WHEEL SYSTEM

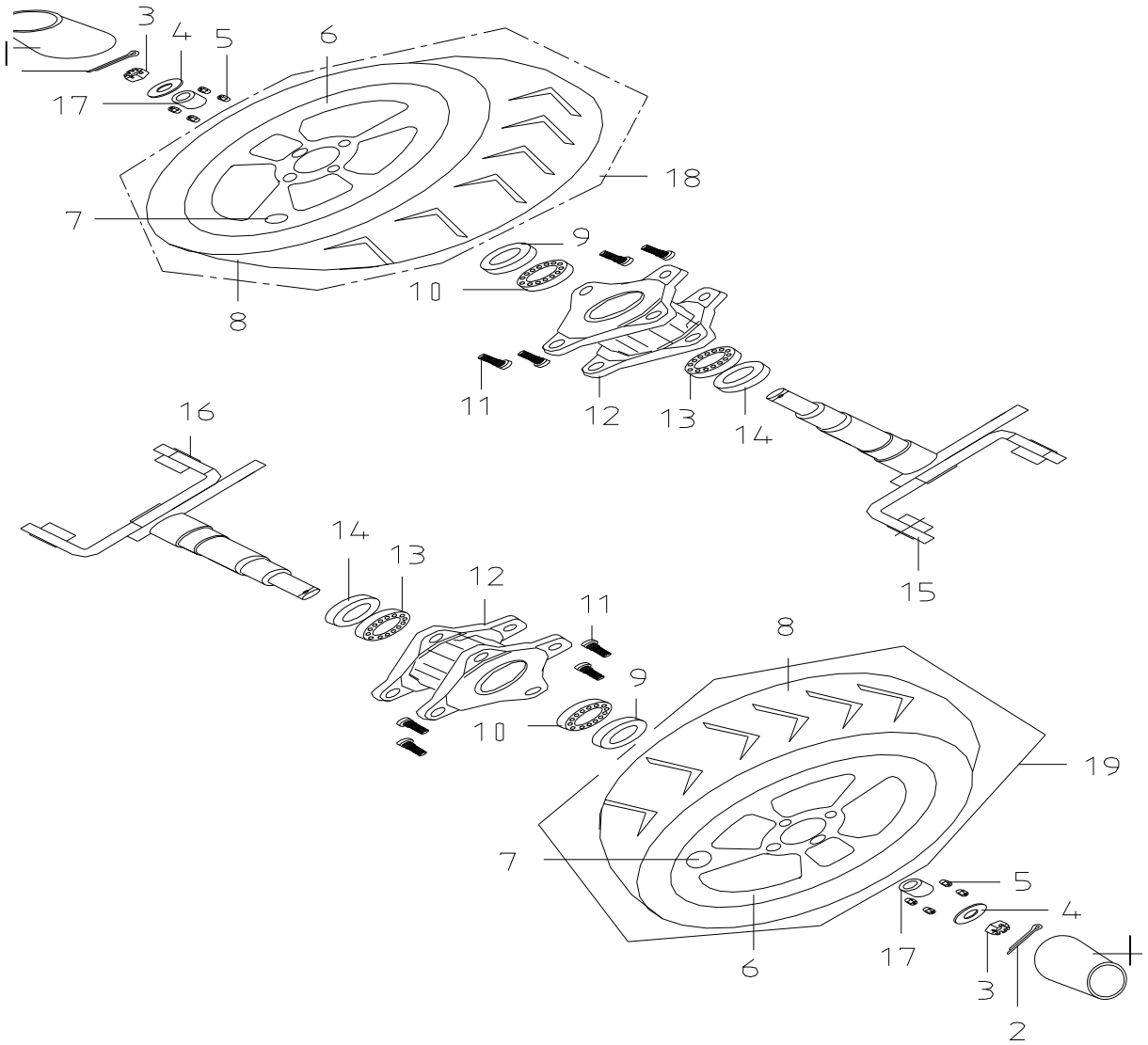

F-4 前轮系统---FRONT WHEEL SYSTEM

序号 REF NO.	代号(PART NO.)	名称	DESCRIPTION	数量 REGD N	备注 REMARK
1	357104010030	轮毂中心盖	WHEEL HUB CENTRAL COVER	2	
2	GB/T91-2000	开口销 3.2×45	COTTER PIN 3.2*45	2	
3	GB/T9457-1988	开槽螺母M14x1.5	SLOTTED NUT M14*1.5	2	
4	357104000020	前轮安装垫圈	FRONT WHEEL INSTALLATION WASHER	2	
5	345000000760	轮子固定螺母M10x1.25	WHEEL FIXING NUT M10*1.25	8	
6	357104010010	前轮辋	FRONT OUTER RIM	2	
7	GB12836.1-1999	无内胎气门嘴Z2-01-2	AIR VALVE WITHOUT INNER TUBE Z2-01-2	2	
8	357104010020	前轮胎	FRONT TIRE	2	
9	GB/T13871-1992	内包骨架油封27x42x7	INNER FRAMED OIL SEAL 27*47*7	2	
10	GB/T276-1994	轴承6004	BEARING 6004	2	
11	357104030020	轮胎螺栓	TIRE BOLT	8	
12	357104030010	前制动盘座	FRONT BRAKE DISC SEAT ASSY	2	
13	GB/T276-1994	轴承6005	BEARING 6005	2	
14	GB/T13871-1992	内包骨架油封28x47x7	INNER FRAMED OIL SEAL 28*47*7	2	
15	357104040000	前轮左支撑组合	FRONT WHEEL LEFT SUPPORT ASSY	1	
16	357104050000	前轮右支撑组合	FRONT WHEEL RIGHT SUPPORT ASSY	1	
17	357104000010	前轮安装衬套	FRONT WHEEL INSTALLATION LINING COVER	2	
18	357104010000	左前轮总成	FRONT WHEEL SYSTEM L	1	
19	357104020000	右前轮总成	FRONT WHEEL SYSTEM R	1	

F-5

后轮系统

REAR WHEEL SYSTEM

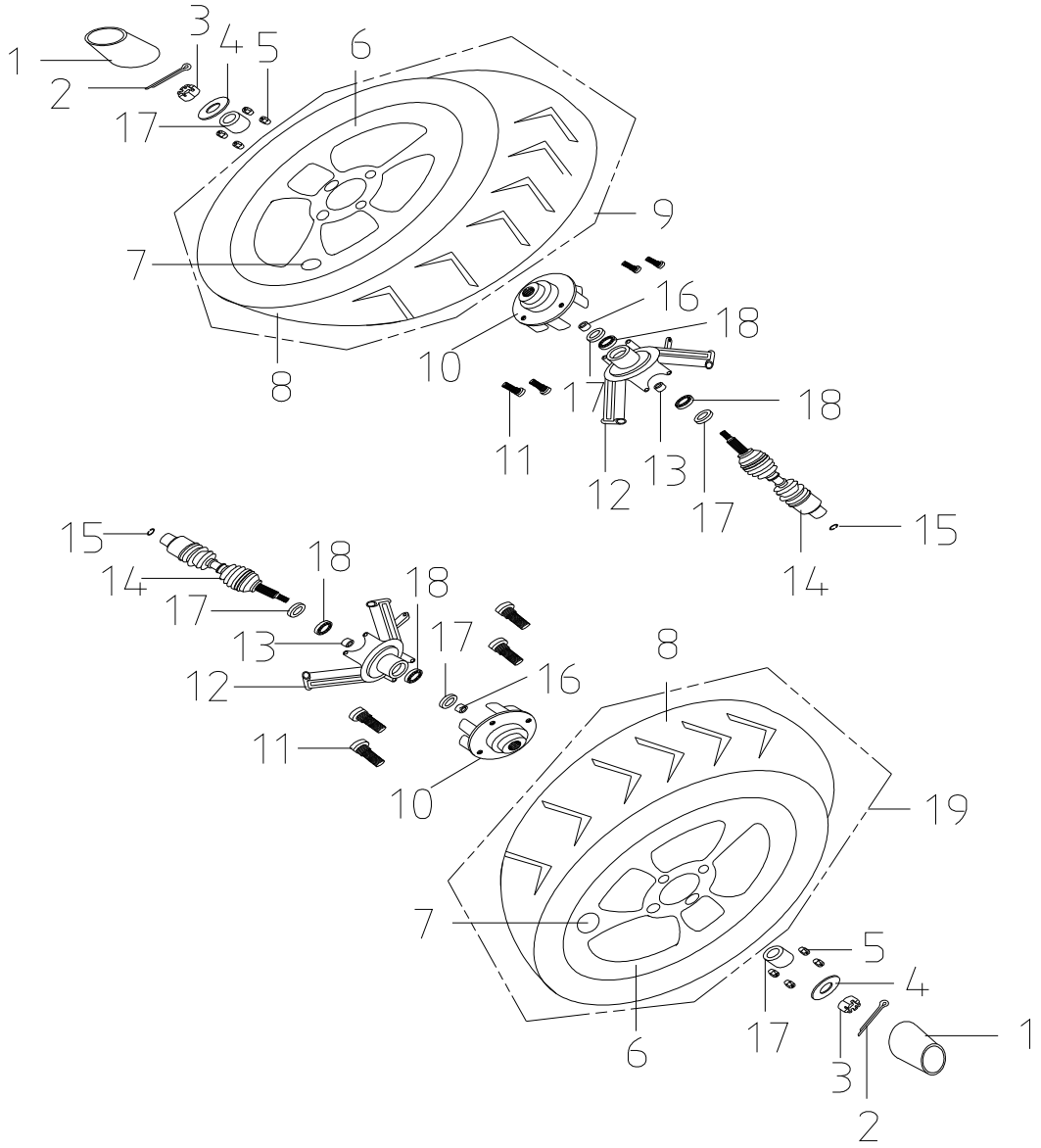

F-5 后轮系统---REAR WHEEL SYSTEM

序号 REF NO.	代号(PART NO.)	名称	DESCRIPTION	数量 REGD N	备注 REMARK
1	357104010030	轮毂中心盖	WHEEL HUB CENTRAL COVER	2	
2	GB/T91-2000	开口销 2.5×45	COTTER PIN 2.5*45	2	
3	GB/T9459-1988	开槽螺母M18x1.5	SLOTTED NUT M18*1.5	2	
4	GB/T97.1-2002	垫圈18	WASHER 18	2	
5	345000000760	轮子固定螺母M10x1.25	WHEEL FIXING NUT M10*1.25	8	
6	357105010010	后轮辋	REAR WHEEL OUTER RIM	2	
7	GB12836.1-1999	无内胎气门嘴Z2-01-2	AIR VALVE WITHOUT INNER TUBE Z2-01-2	2	
8	357105010020	后轮胎	REAR TIRE	2	
9	357105010000	左后轮总成	REAR WHEEL SYSTEM L	1	
10	357105030010	后制动盘座	REAR BRAKE DISC SEAT	2	
11	357104030020	轮胎螺栓	TIRE BOLT	8	
12	357105040010	后制动器安装座	REAR BRAKE INSTALLATION SEAT	2	
13	357105040020	衬圈	LINING RING	2	
14	357105030000	后传动轴	REAR TRANSMISSION AXLE	2	
15	357105000020	钢丝挡圈	STEEL WIRE BLOCK RING	2	
16	357105000010	后轮安装衬套	REAR WHEEL INSTALLATION LINING COVER	2	
17	GB/T13871-1992	内包骨架油封38x55x7	INNER FRAMED OIL SEAL 38*55*7	4	
18	GB/T276-1994	轴承6006	BEARING 6006	4	
19	357105020000	右后轮总成	REAR WHEEL SYSTEM R	1	

F-6

制动器系统

BRAKE SYSTEM

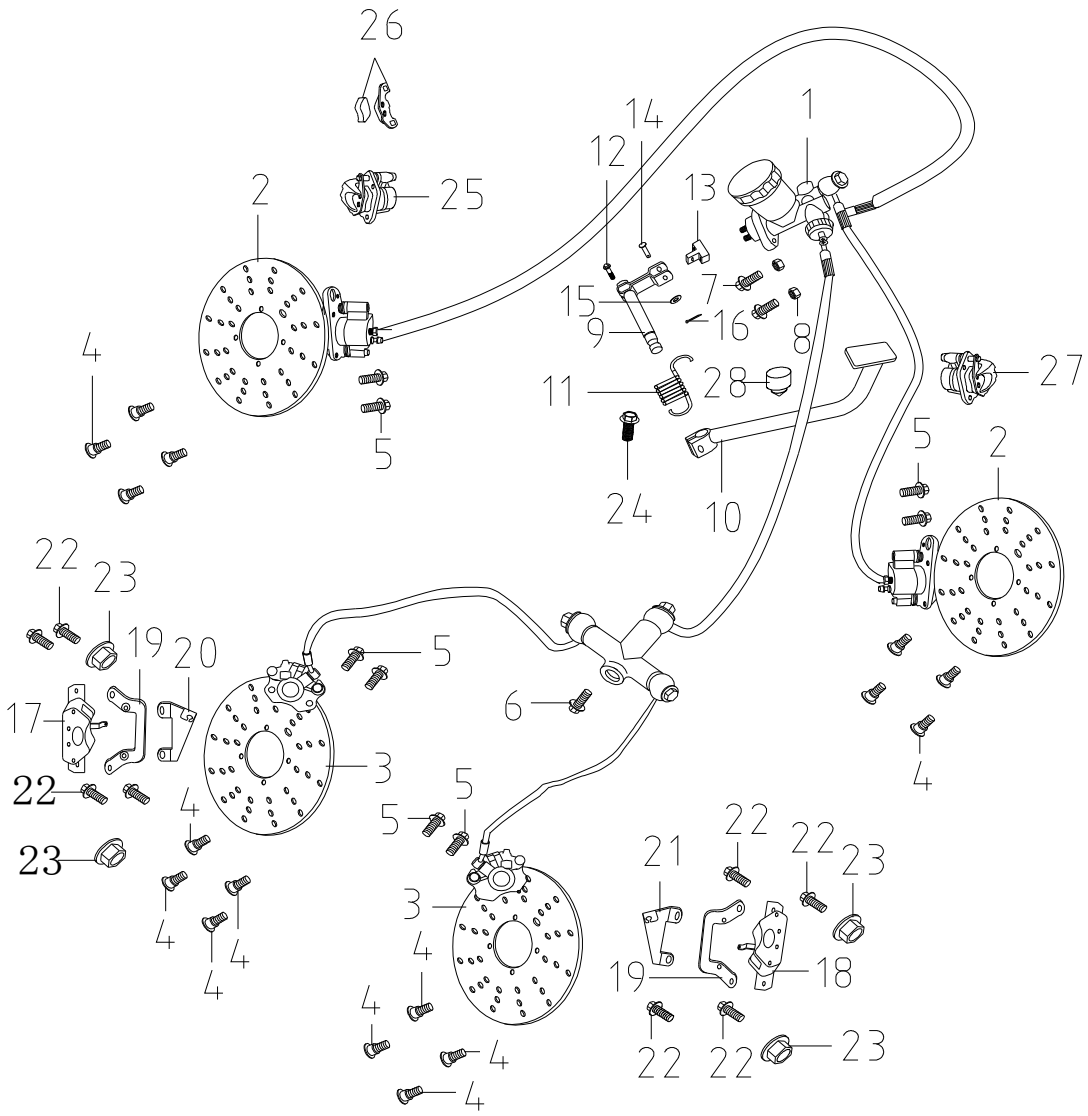

F-6 制动器系统---BRAKE SYSTEM

序号 REF NO.	代号(PART NO.)	名称	DESCRIPTION	数量 REGD N	备注 REMARK
1	357112010000	制动器	BRAKE	1	
2	357112010010	前制动盘φ250	FRONT BRAKE DISC φ250	2	
3	357112010020	后制动盘φ250	REAR BRAKE DISC φ250	2	
4	345212000020	制动盘螺钉（带台阶,镀铬）	BRAKE DISC SCREW (WITH STEP, CHROMATE TREATED	16	
5	GB/T16674-1996	六角法兰面螺栓M8x16	HEXAGONAL BOLT FLANGE M8*16	8	
6	GB/T16674-1996	六角法兰面螺栓M8x30	HEXAGONAL BOLT FLANGE M8*30	1	
7	GB/T16674-1996	六角法兰面螺栓M8x30	HEXAGONAL BOLT FLANGE M8*30	2	
8	GB/T6170-2000	六角螺母M8	HEXAGONAL NUT M8	2	
9	357112041000	脚刹杆轴组合	BRAKE PEDAL INSTALLATION AXLE	1	
10	357112042000	制动踏板组合	BRAKE PEDAL	1	
11	357100000760	制动踏板扭簧	FOOT BRAKE LEVER RESTORATION SPRING	1	
12	GB/T16674-1996	六角法兰面螺栓M6x40	HEXAGONAL BOLT FLANGE M6*40	1	
13	357112000050	主压杆	MAIN PRESS LEVER	1	
14	GB/T882-1986	销轴B6×20	PIN AXLE B6*20	1	
15	GB/T97.1-2002	垫圈6	WASHER 6	1	
16	GB/T91-2000	开口销1.6×20	COTTER PIN 1.6*20	1	
17	357112020000	驻车制动器(左)	PARKING BRAKE (LEFT)	1	
18	357112030000	驻车制动器(右)	PARKING BRAKE (RIGHT)	1	
19	357112060000	驻车制动器连接板组合	PARKING BRAKE CONNECTION BOARD ASSY	2	
20	357112000030	驻车拉索固定板(左)	PARKING CABLE FIXING BOARD (LEFT)	1	
21	357112000040	驻车拉索固定板(右)	PARKING CABLE FIXING BOARD (RIGHT)	1	

F-6 制动器系统---BRAKE SYSTEM

序号 REF NO.	代号(PART NO.)	名称	DESCRIPTION	数量 REGD N	备注 REMARK
22	GB/T16674-1996	六角法兰面螺栓M8x20	HEXAGONAL BOLT FLANGE M8*20	8	
23	GB/T6187.1-2000	全金属六角法兰面锁紧螺母M8	ALL-METAL SELF-LOCK HEXAGONAL NUT FLANGE M8	4	
24	GB/T16674-1996	六角法兰面螺栓M6x20	HEXAGONAL BOLT FLANGE M6*20	1	
25	346212030000L	左制动分泵	REAR BRAKE CALIPER(L)	2	
26	345012021000	制动摩擦片	PAD SET.FR.BRAKE CALIPER	2	
27	346212030000R	右制动分泵	REAR BRAKE CALIPER(R)	2	

F-7

操纵系统

OPERATING SYSTEM

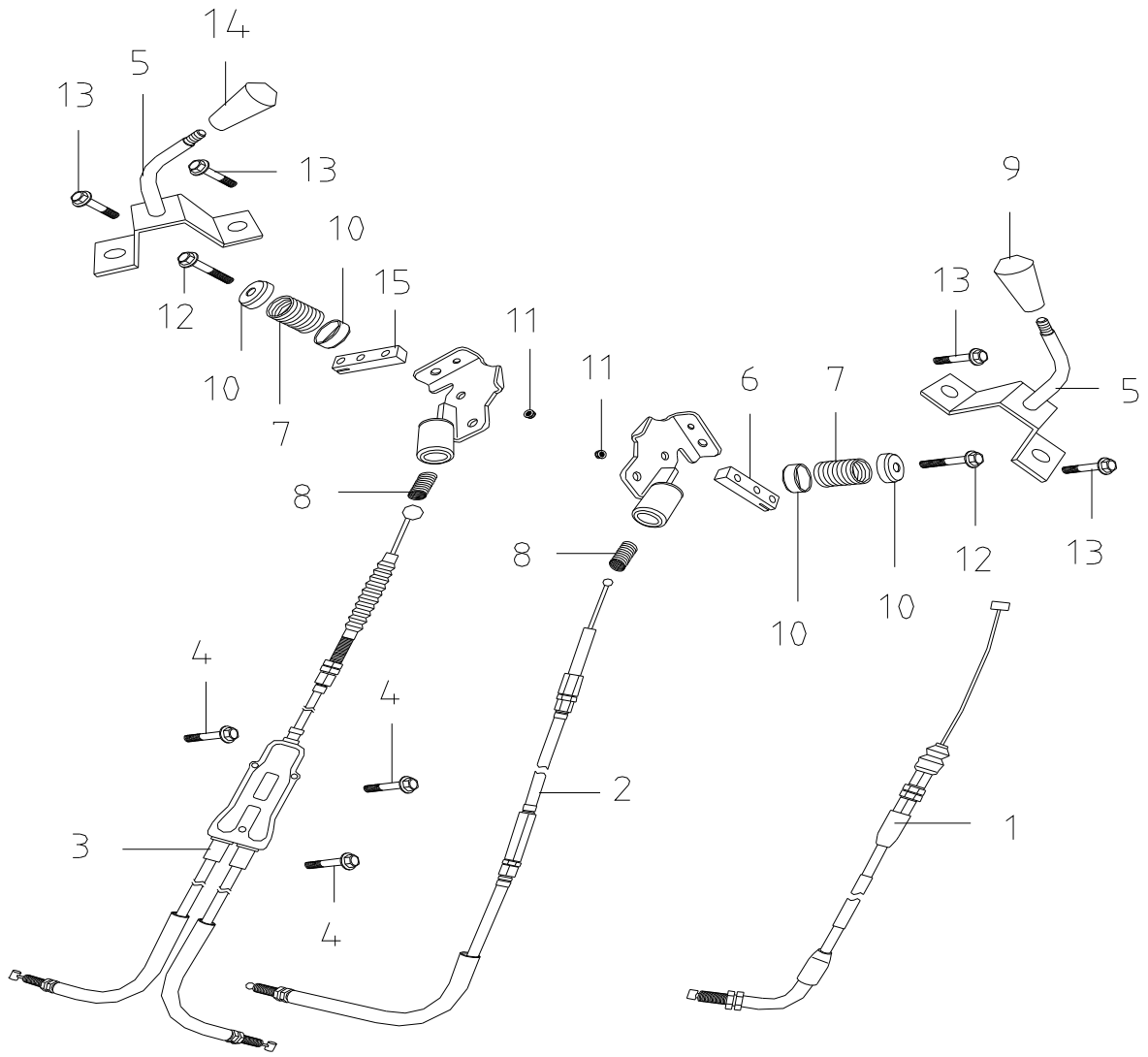

F-7 操纵系统---OPERATING SYSTEM

序号 REF NO.	代号(PART NO.)	名称	DESCRIPTION	数量 REGD N	备注 REMARK
1	357113010000	油门拉索	THROTTLE CABLE	1	
2	357113020000	倒档拉索	REVERSE CABLE	1	
3	357113040000	驻车拉索	PARKING CABLE	1	
4	GB/T823-1988	十字槽小盘头螺钉M5x14	CROSS SLOTTED SMALL COIL-HEAD SCREW M5*14	2	
5	357146010000	倒档手柄焊接件	REVERSE HANDLE	1	
6	357146000010	驻车手柄焊接件	REVERSE OPERATION LEVER	1	
7	345000000240	倒档弹簧1	REVERSE SRPING 1	2	
8	345000000250	倒档弹簧2	REVERSE SRPING 2	2	
9	357146000020	倒档手柄胶套	REVERSE HANDLE PLASTIC COVER	1	
10	345000000270	弹簧座	SPRING SEAT	4	
11	GB/T6187.1-2000	全金属六角法兰面锁紧螺母M8	ALL-METAL SELF-LOCK HEXAGONAL NUT FLANGE M8	2	
12	GB/T16674-1996	六角法兰面螺栓M8x60	HEXAGONAL BOLT FLANGE M8*60	2	
13	GB/T16674-1996	六角法兰面螺栓M8x20	HEXAGONAL BOLT FLANGE M8*20	4	
14	357112050020	驻车手柄胶套	PARKING HANDLE PLASTIC COVER	1	
15	357112050010	驻车操纵杆	PARKING OPERATION LEVER	1	

F-8

减震系统

SHOCK ABSORBER ASSY

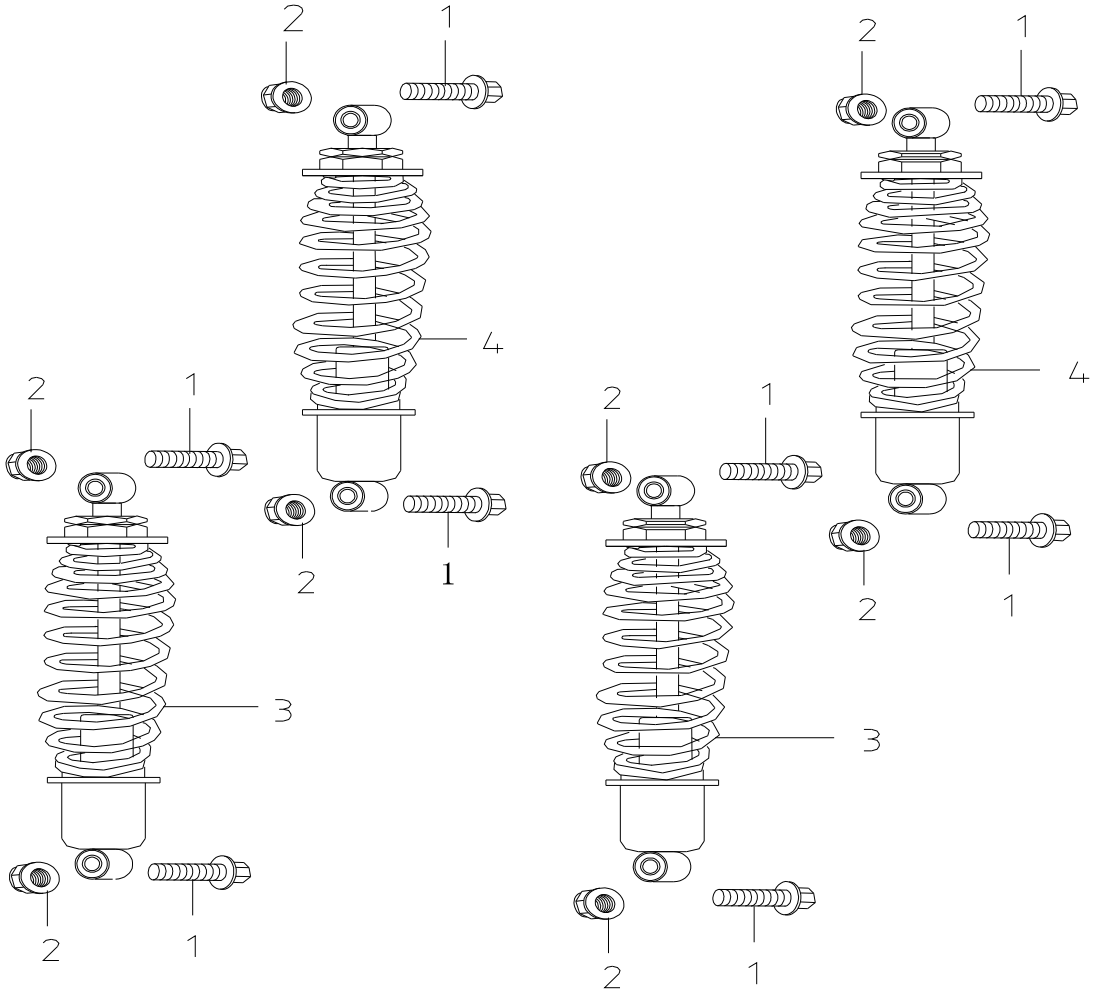

F-8 减震系统---SHOCK ABSORBER ASSY

序号 REF NO.	代号(PART NO.)	名称	DESCRIPTION	数量 REGD N	备注 REMARK
1	GB/T16674-1996	六角法兰面螺栓M12x1.25x45	HEXAGONAL BOLT FLANGE M12*1.25*45	8	
2	GB/T6187.2-2000	全金属六角法兰面锁紧螺母M12x1.25	ALL-METAL SELF-LOCK HEXAGONAL NUT FLANGE M12*1.25	8	
3	357103010000	前减震器总成	FRONT SHOCK ABSORBER ASSY	2	
4	357103020000	后减震器总成	REAR SHOCK ABSORBER ASSY	2	

F-9

散热系统

RADIATOR ASSY

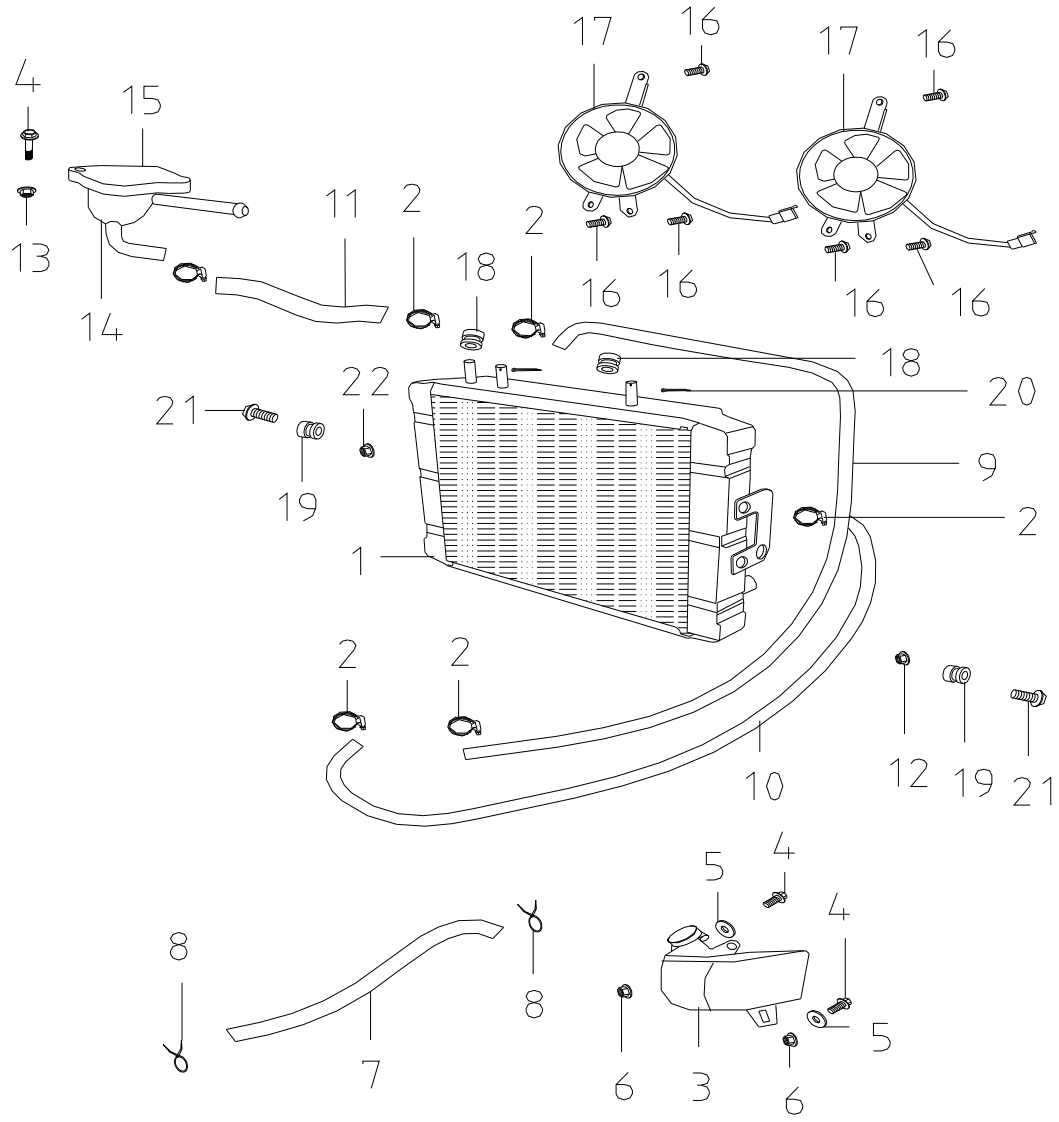

F-9 散热系统--RADIATOR ASSY

序号 REF NO.	代号(PART NO.)	名称	DESCRIPTION	数量 REGD N	备注 REMARK
1	357122010000	散热器	RADIATOR	1	
2	346022030000	水管卡箍	WATER PIPE CLIP	6	
3	346022040000	蓄水壶部件	WATER POT PARTS	1	
4	GB/T16674-1996	六角法兰面螺栓M6x20	HEXAGONAL BOLT FLANGE M6*20	3	
5	GB/T96.1-2002	大垫圈 6	BIG WASHER 6	2	
6	GB/T6187.1-2000	全金属六角法兰面锁紧螺母M6	ALL-METAL SELF-LOCK HEXAGONAL NUT FLANGE M6	2	
7	357122000010	蓄水壶水管	WATER POT PIPE	1	
8	346120000050	卡簧φ12	CLIP SPRING φ12	2	
9	357122000020	发动机进水管	ENGINE WATER INLET PIPE	1	
10	357122000030	发动机出水管	ENGINE WATER OUTLET PIPE	1	
11	357122000040	散热器进水管	RADIATOR INLET PIPE	1	
12	GB/T6187.1-2000	全金属六角法兰面锁紧螺母M8	ALL-METAL SELF-LOCK HEXAGONAL NUT FLANGE M8	2	
13	GB/T6187.1-2000	全金属六角法兰面锁紧螺母M6	ALL-METAL SELF-LOCK HEXAGONAL NUT FLANGE M6	1	
14	357122000100	注水杯	WATER INJECTION CUP	1	
15	357122000110	注水杯盖	WATER INJECTION CUP COVER	1	
16	GB/T16674-1996	六角法兰面螺栓 M6×12	HEXAGONAL BOLT FLANGE M6*12	6	
17	357122050000	冷却风扇	COOLING FAN	2	
18	346022000130	散热器减震胶垫A	RADIATOR DAMPING PLASTIC WASHER A	2	
19	346022000140	散热器减震胶垫B	RADIATOR DAMPING PLASTIC WASHER B	2	
20	GB/T91-2000	开口销2.0×20	COTTER PIN 2.0*20	2	
21	GB/T16674-1996	六角法兰面螺栓M8×20	HEXAGONAL BOLT FLANGE M8*20	2	

F-10

排气消声器

EXHAUST SIENCER

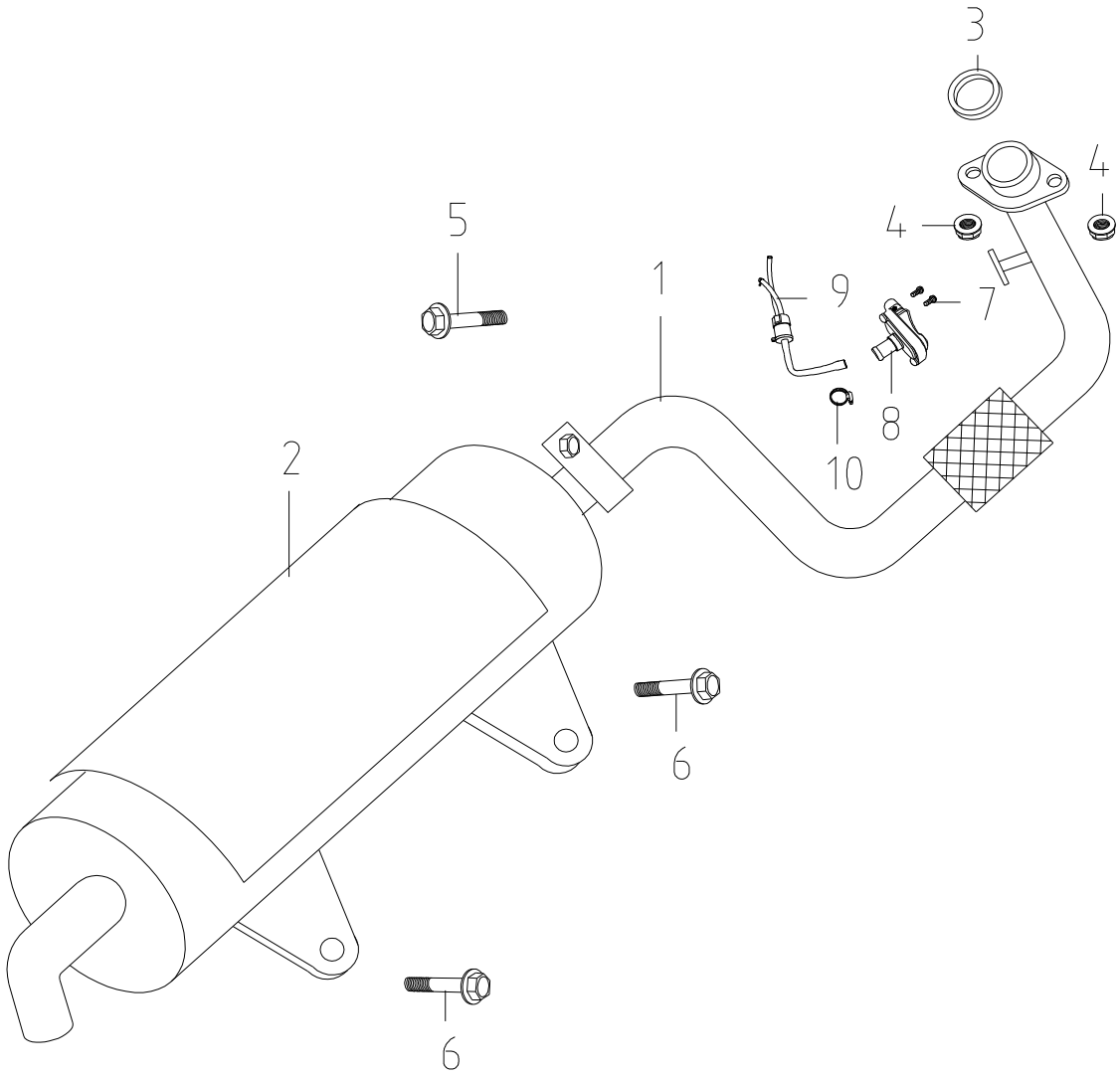

F-10 排气消声器--EXHAUST SIENCER

序号 REF NO.	代号(PART NO.)	名称	DESCRIPTION	数量 REGD N	备注 REMARK
1	357117010000	排气管总成	EXHAUST TUBE ASSY	1	
2	357117020000	消声器总成	SILENCER ASSY	1	
3	357117030000	排气管垫圈	EXHAUST TUBE WASHER	1	
4	GB/T6187.1-2000	全金属六角法兰面锁紧螺母M8	ALL-METAL SELF-LOCK HEXAGONAL NUT FLANGE M8	2	
5	GB/T16674-1996	六角法兰面螺栓M8x30	HEXAGONAL BOLT FLANGE M8*30	1	
6	GB/T16674-1996	六角法兰面螺栓M8x35	HEXAGONAL BOLT FLANGE M8*35	2	
7	GB/T5783-1986	六角螺栓M6x14	HEXAGONAL BOLT M6*14	2	
8	345217030000	二次补气阀	DUPLICATE AIR-SUPPLYING VALVE	1	
9	345217020000	油水分离器	OIL-WATER SEGREGATOR	1	
10	346022030000	水管卡箍	WATER PIPE CLIP	1	

F-11

电器系统

ELECTRICAL
EQUIPMENT SYSTEM

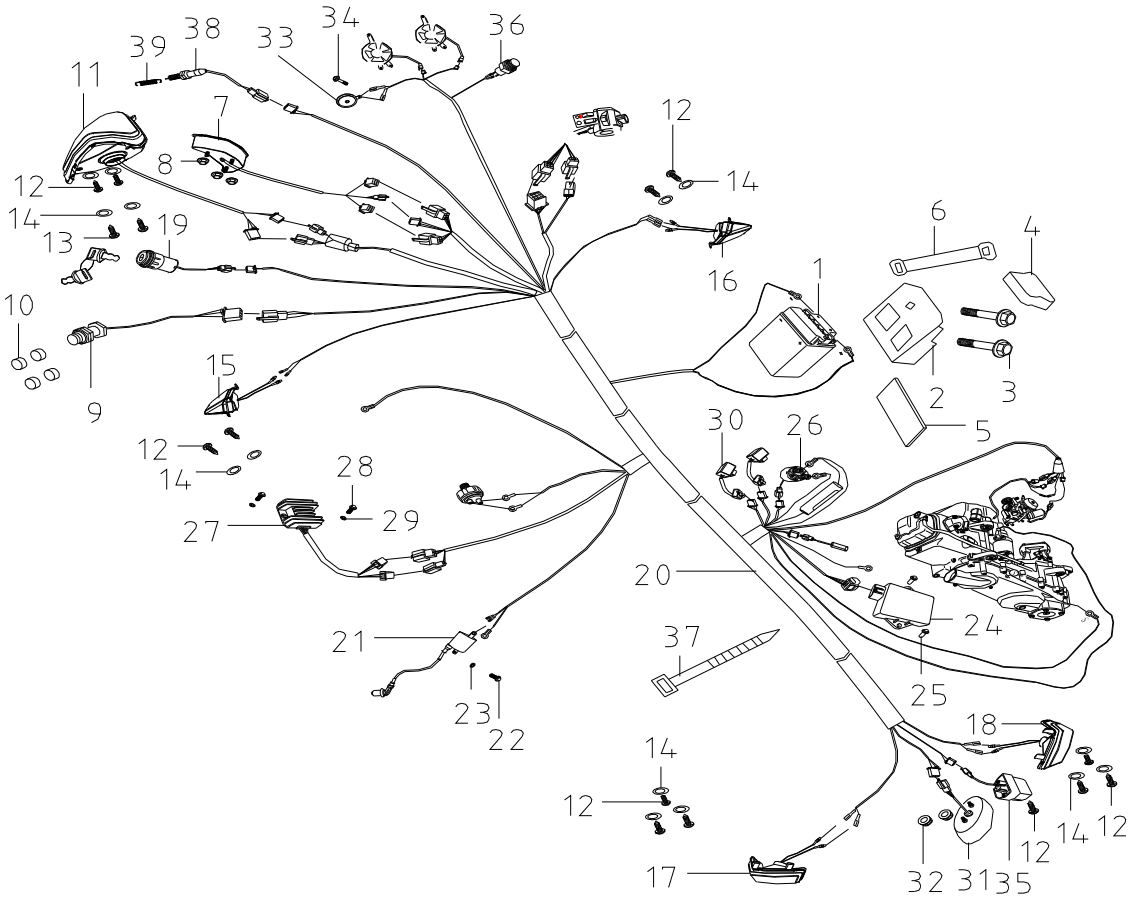

F-11 电器系统--ELECTRICAL EQUIPMENT SYSTEM

序号 REF NO.	代号(PART NO.)	名称	DESCRIPTION	数量 REGD N	备注 REMARK
1	345009120000	蓄电池(12V14Ah)	BATTERY (12V14Ah)	1	
2	345000000650	蓄电池盒	BATTERY BOX	1	
3	GB/T16674-1996	六角法兰面螺栓M8x20	HEXAGONAL BOLT FLANGE M8*20	2	
4	345000000660	蓄电池盒盖	BATTERY BOX COVER	1	
5	345000000730	蓄电池减震垫	BATTERY DAMPING CUSHION	1	
6	345000000670	蓄电池固定带	BATTERY FIXING BAND	1	
7	357109180000	仪表组件	INSTRUMENT ASSY	1	
8	GB/T6187.1-2000	全金属六角法兰面锁紧螺母M5	ALL-METAL SELF-LOCK HEXAGONAL NUT FLANGE M5	3	
9	357109170000	速度传感器	SPEED SENSOR	1	
10	357109171000	磁钢	MAGNET STEEL	4	
11	357109040000	前照灯	FRONT LIGHT	1	
12	GB/T845-1985	自攻螺钉ST3.9x13	SELF-ATTACK SCREW ST3.9*13	13	
13	GB/T845-1985	自攻螺钉ST3.9x19	SELF-ATTACK SCREW ST3.9*19	2	
14	GB/T97.1-2002	垫圈4	WASHER 4	14	
15	357109050000	前左转向灯	FRONT LEFT INDICATOR	1	
16	357109060000	前右转向灯	FRONT RIGHT INDICATOR	1	
17	357109070000	后左转向灯	REAR LEFT INDICATOR	1	
18	357109080000	后右转向灯	REAR RIGHT INDICATOR	1	
19	353109011000	点火开关	IGNITION SWITCH	1	
20	357109020000	电缆	ELECTRIC CABLE	1	
21	346209050000	点火线圈	IGNITION COIL	1	

F-11 电器系统--ELECTRICAL EQUIPMENT SYSTEM

序号 REF NO.	代号(PART NO.)	名称	DESCRIPTION	数量 REGD N	备注 REMARK
22	GB/T16674-1996	六角法兰面螺栓M6x20	HEXAGONAL BOLT FLANGE M6*20	1	
23	GB/T93-1987	弹簧垫圈6	SPRING WASHER 6	1	
24	346209040000	点火器	IGNITER	1	
25	GB/T16674-1996	六角法兰面螺栓M6x25	HEXAGONAL BOLT FLANGE M6*25	2	
26	346009140000	启动继电器	START RELAY	1	
27	346009130000	调压整流器部件	RECTIFIER REGULATOR ASSY	1	
28	GB/T16674-1996	六角法兰面螺栓M6x30	HEXAGONAL BOLT FLANGE M6*30	2	
29	GB/T93-1987	弹簧垫圈6	SPRING WASHER 6	2	
30	345009018000	三线闪光器	TRIPLE-LINE FLASHER	2	
31	345009100000	尾灯刹车灯	TAILLIGHT BRAKE LIGHT	1	
32	GB/T6187.1-2000	全金属六角法兰面锁紧螺母M6	ALL-METAL SELF-LOCK HEXAGONAL NUT FLANGE M6	2	
33	345009090000	喇叭	HORN	1	
34	GB/T16674-1996	六角法兰面螺栓M6x12	HEXAGONAL BOLT FLANGE M6*12	1	
35	345209200000	后牌照灯	REAR PLATE LIGHT	1	
36	346022000120	温控开关	TEMPERATURE CONTORL SWITCH	1	
37	345000000280	扎带	BAND	40	
38	354009050000	后制动开关	REAR BRAKE SWITCH	1	
39	346124010030	油门踏板拉簧	THROTTLE PEDAL DRAWSPRING	1	
		六角法兰面螺栓M5x20	HEXAGONAL BOLT FLANGE M5*20	2	
		点火线圈安装支架	IGNITION COIL FIXING HOLDER	1	

F-12

坐垫系统

SEAT CUSHION SYSTEM

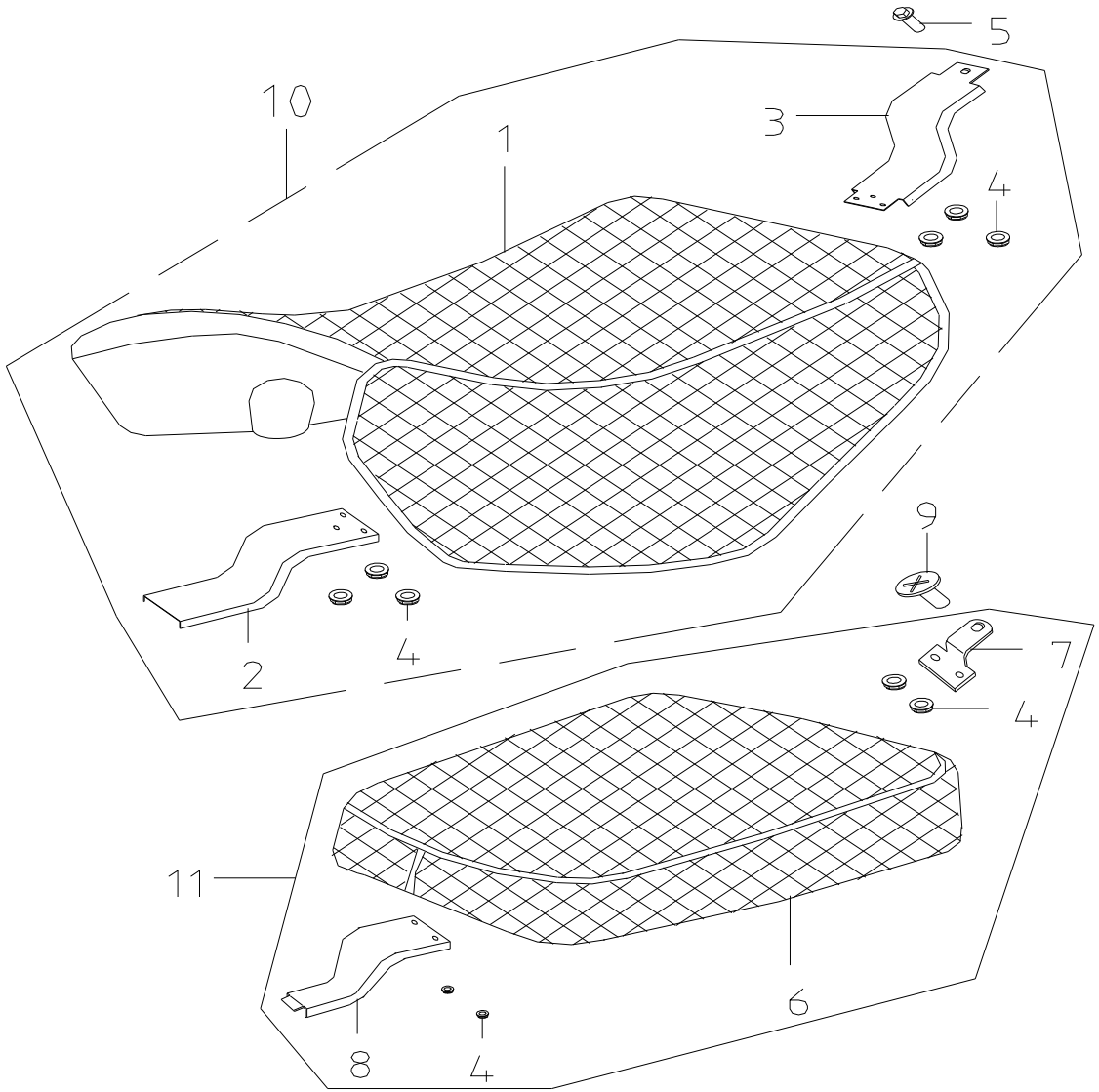

F-12 坐垫系统--SEAT CUSHION SYSTEM

序号 REF NO.	代号(PART NO.)	名称	DESCRIPTION	数量 REGD N	备注 REMARK
1	357107010000	主座垫	MAIN SEAT CUSHION	1	
2	357107010010	座垫前挂钩	SEAT CUSHION FRONT HOOK	1	
3	357107010020	座垫后挂钩	SEAT CUSHION REAR HOOK	1	
4	GB/T6187.1-2000	全金属六角法兰面锁紧螺母M6	ALL-METAL SELF-LOCK HEXAGONAL NUT FLANGE M6	10	
5	GB/T16674-1996	六角法兰面螺栓M6x12	HEXAGONAL BOLT FLANGE M6*12	1	
6	357107020000	副座垫	AUXILIARY SEAT CUSHION	1	
7	357107020010	副座垫后安装板	AUXILIARY SEAT CUSHION REAR INSTALLATION PANEL	1	
8	357107020020	副座垫前安装板	AUXILIARY SEAT CUSHION FRONT INSTALLATION PANEL	1	
9	GB/T947-1988	开槽球面大圆柱头螺钉M6x16	SLOTTED SPHERE BIG SPHERICAL HEAD SCREW M6*16	1	
10	357107030000	主座垫总成	MAIN SEAT CUSHION SYSTEM	1	
11	357107040000	副座垫总成	AUXILIARY SEAT CUSHION SYSTEM	1	

F-13

后货架

REAR CARGO SHELF SYSTEM

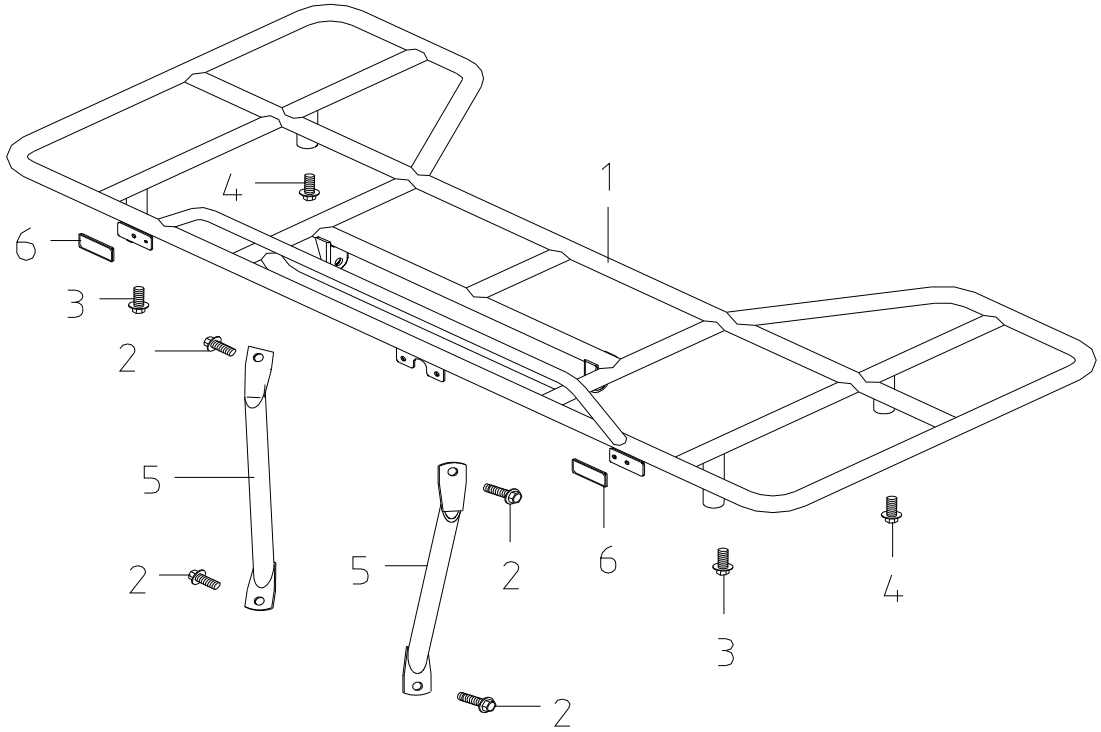

F-13 后货架--REAR CARGO SHELF SYSTEM

序号 REF NO.	代号(PART NO.)	名称	DESCRIPTION	数量 REGD N	备注 REMARK
1	357110010000	后货架	REAR CARGO SHELF	1	
2	GB/T16674-1996	六角法兰面螺栓M10x1.25x25	HEXAGONAL BOLT FLANGE M10*1.25*25	4	
3	GB/T16674-1996	六角法兰面螺栓M8x50	HEXAGONAL BOLT FLANGE M8*50	2	
4	GB/T16674-1996	六角法兰面螺栓M8×16	HEXAGONAL BOLT FLANGE M8*16	2	
5	357110000010	后货架后支撑	REAR CARGO SHELF SUPPORT	1	
6	345041000000	后侧反光片	REAR SIDE REFLECTOR	2	
	GB/T6187.1-2000	全金属六角法兰面锁紧螺母M10	ALL-METAL SELF-LOCK HEXAGONAL NUT FLANGE M10		

F-14

油箱系统

FUEL TANK SYSTEM

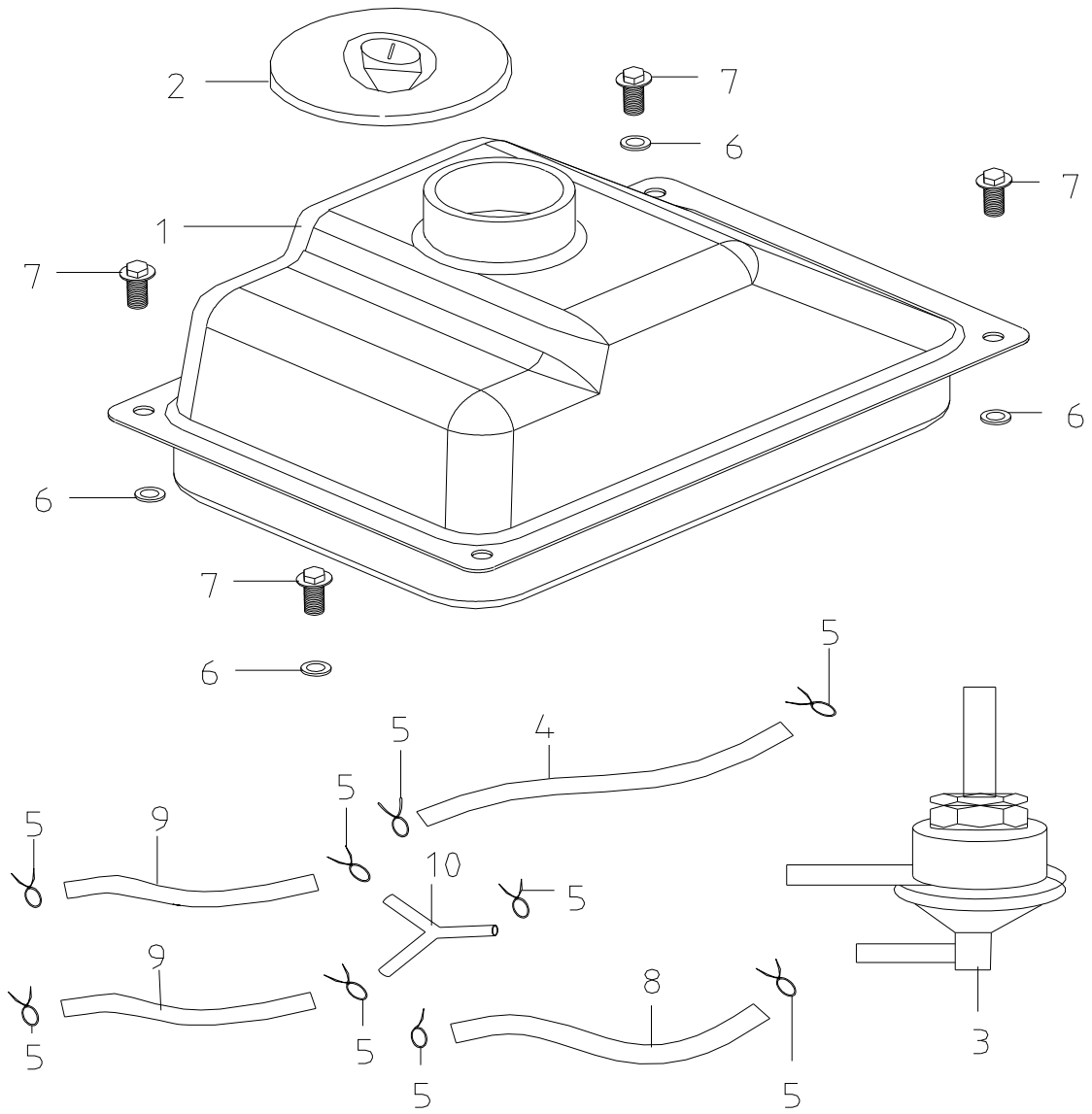

F-14 油箱系统--FUEL TANK SYSTEM

序号 REF NO.	代号(PART NO.)	名称	DESCRIPTION	数量 REGD N	备注 REMARK
1	357108010000	油箱	FUEL TANK	1	
2	357108020000	油箱盖	FUEL TANK COVER	1	
3	345008030000	油开关	FUEL SWITCH	1	
4	357108000010	油管	FUEL PIPE	1	
5	345000000070	油管卡簧φ8	FUEL PIPE CLIP SPRING φ8	8	
6	354000000330	胶垫φ6	PLASTIC WASHER φ6	4	
7	GB/T16674-1996	六角法兰面螺栓M6x16	HEXAGONAL BOLT FLANGE M6*16	4	
8	357100000010	负压管1	PRESSURE-BEARING TUBE 1	1	
9	346208000070	负压管Ⅱ(φ7×φ3.5×80)	PRESSURE-BEARING TUBE II (φ7×φ3.5×80)	2	
10	345000000440	负压管三通	PRESSURE-BEARING TUBE TRIPLE WAY	1	

F-15

空滤器、化油器

AIR

FILTER，CARBURETTOR

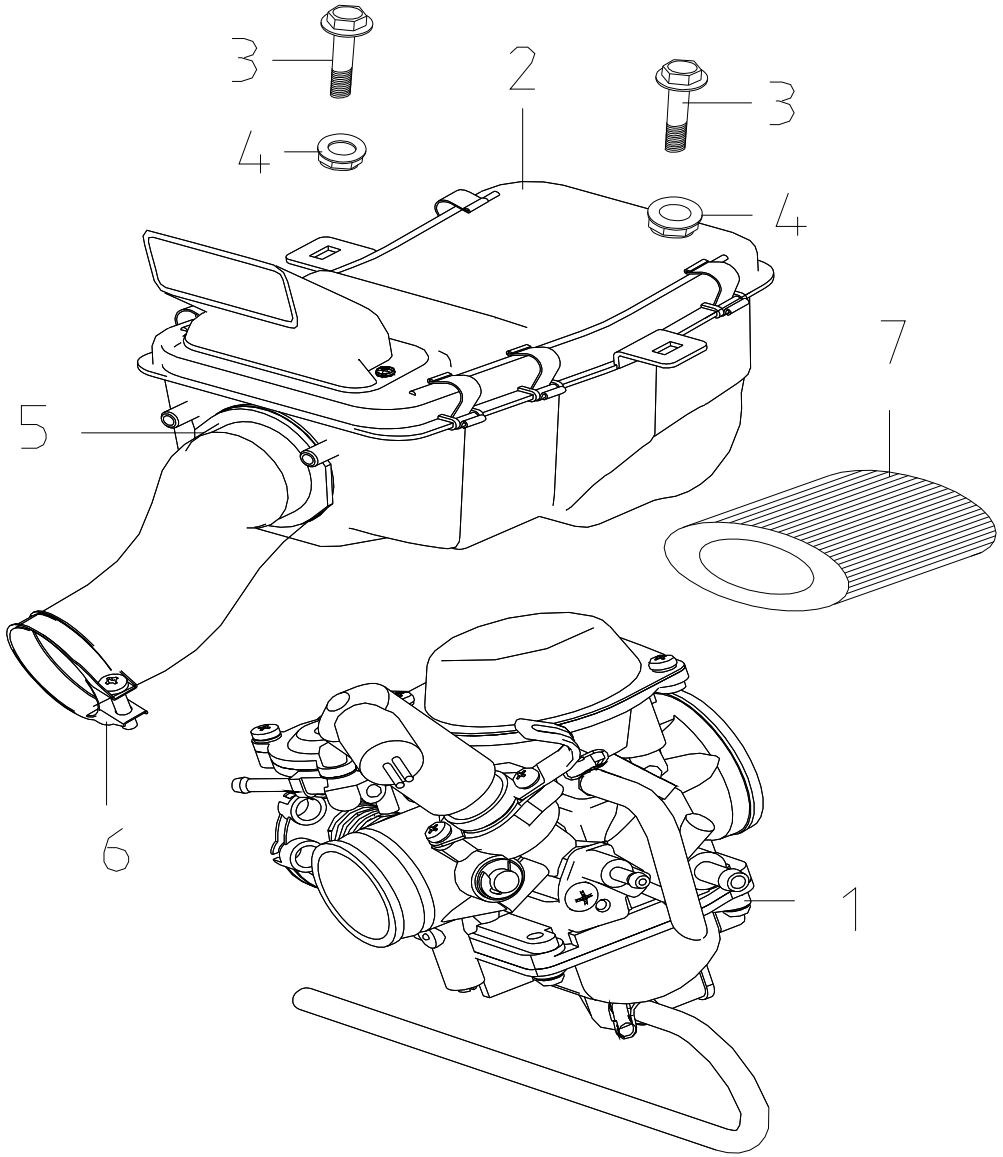

F-15 空滤器、化油器--AIR FILTER，CARBURETTOR

序号 REF NO.	代号(PART NO.)	名称	DESCRIPTION	数量 REGD N	备注 REMARK
1	346216000000	化油器	CARBURETTOR	1	
2	346218000000	空滤器	AIR CLEANER ASSY	1	
3	GB/T16674-1996	六角法兰面螺栓M8x25	HEXAGONAL BOLT FLANGE M8*25	2	
4	GB/T6187.1-2000	全金属六角法兰面锁紧螺母M8	ALL-METAL SELF-LOCK HEXAGONAL NUT FLANGE M8	2	
5	346218000010	空滤器卡箍Ⅰ	BAND AIRCLEANERCONNECTING TUBE 1	1	
6	346218000020	空滤器卡箍Ⅱ	BAND AIRCLEANERCONNECTING TUBE 2	1	
7	346218000050	空滤器滤芯	ELEMENT AIR CLEANER	1	

F-16
外观件（1）

EXTERNAL APPEARANCE PIECES（1）

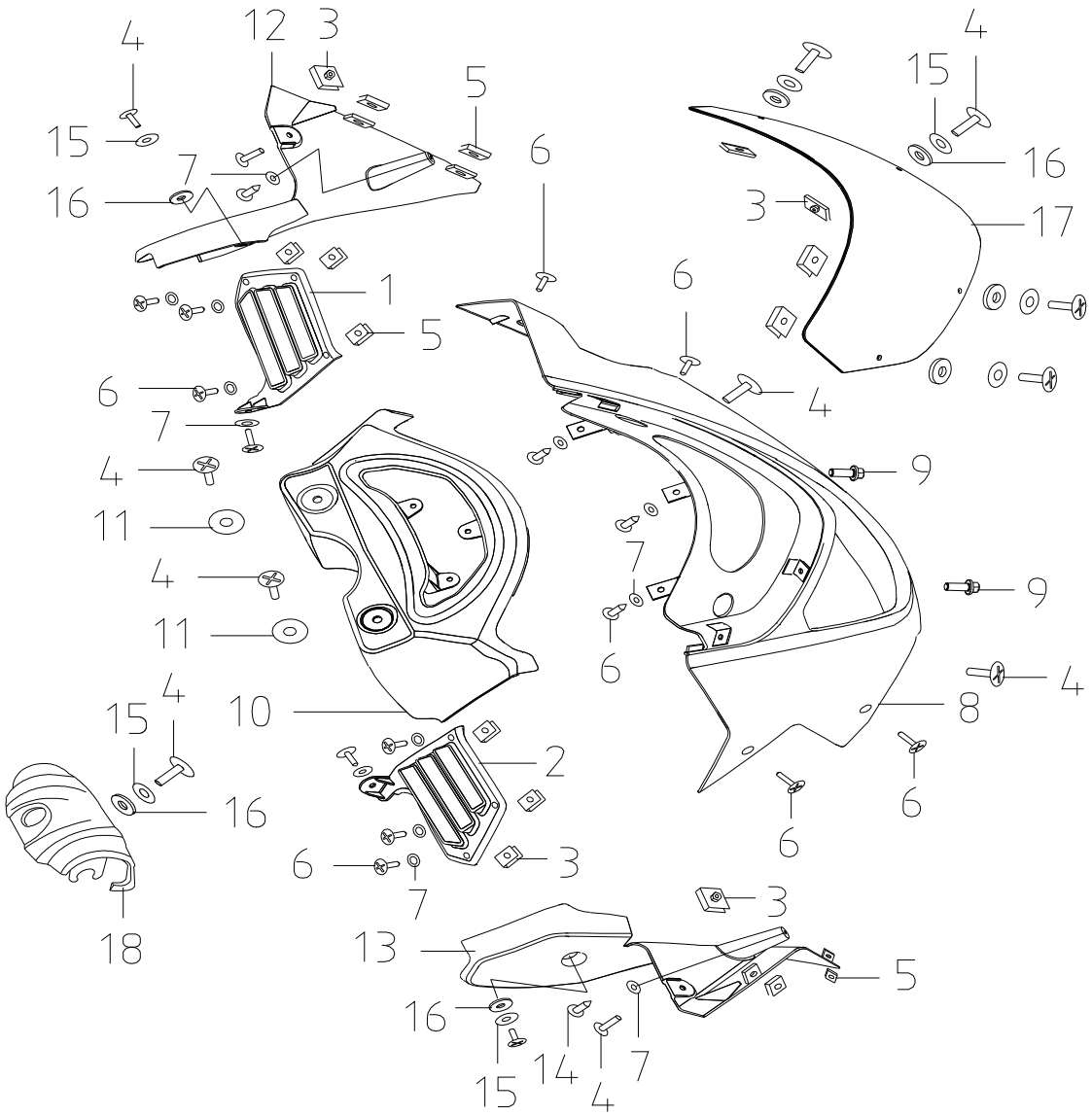

F-16 外观件（1）---EXTERNAL APPEARANCE PIECES（1）

序号 REF NO.	代号(PART NO.)	名称	DESCRIPTION	数量 REGD N	备注 REMARK
1	357100000330	车头后盖(左)	VEHICLE HEAD REAR COVER (LEFT)	1	
2	357100000340	车头后盖(右)	VEHICLE HEAD REAR COVER (RIGHT)	1	
3	354000000050	M6夹片螺母	M6 CLIP FLAKE NUT	6	
4	GB/T947-1988	开槽球面大圆柱头螺钉M6x16	SLOTTED SPHERE BIG SPHERICAL HEAD SCREW M6x16	13	
5	357100000680	夹片ST4.2	CLIP FLAKE ST4.2	10	
6	GB/T845-1985	自攻螺钉ST3.9x13	SELF-ATTACK SCREW ST3.9*13	15	
7	GB/T97.1-2002	垫圈4	WASHER 4	13	
8	357100000410	车头前盖	VEHICLE HEAD FRONT COVER	1	
9	GB/T16674-1996	六角法兰面螺栓M6x16	HEXAGONAL BOLT FLANGE M6*20	2	
10	357100000480	仪表盖	INSTRUMENT COVER	1	
11	GB/T5287-2002	特大垫圈6	SUPER LARGE WASHER 6	2	
12	357100000540	车头侧盖(左)	VEHICLE HEAD SIDE COVER (LEFT)	1	
13	357100000550	车头侧盖(右)	VEHICLE HEAD SIDE COVER (RIGHT)	1	
14	GB/T845-1985	自攻螺钉ST3.9x19	SELF-ATTACK SCREW ST3.9*13	2	
15	GB/T96.1-2002	大垫圈6	BIG WASHER 6	7	
16	354000000330	胶垫φ6	PLASTIC GASKET φ6	7	
17	357100000570	挡风玻璃	WINDSHIELD	1	
18	357100000580	总开关盖	GENERAL SWITCH COVER	1	

F-17
外观件（2）

EXTERNAL APPEARANCE
PIECES（2）

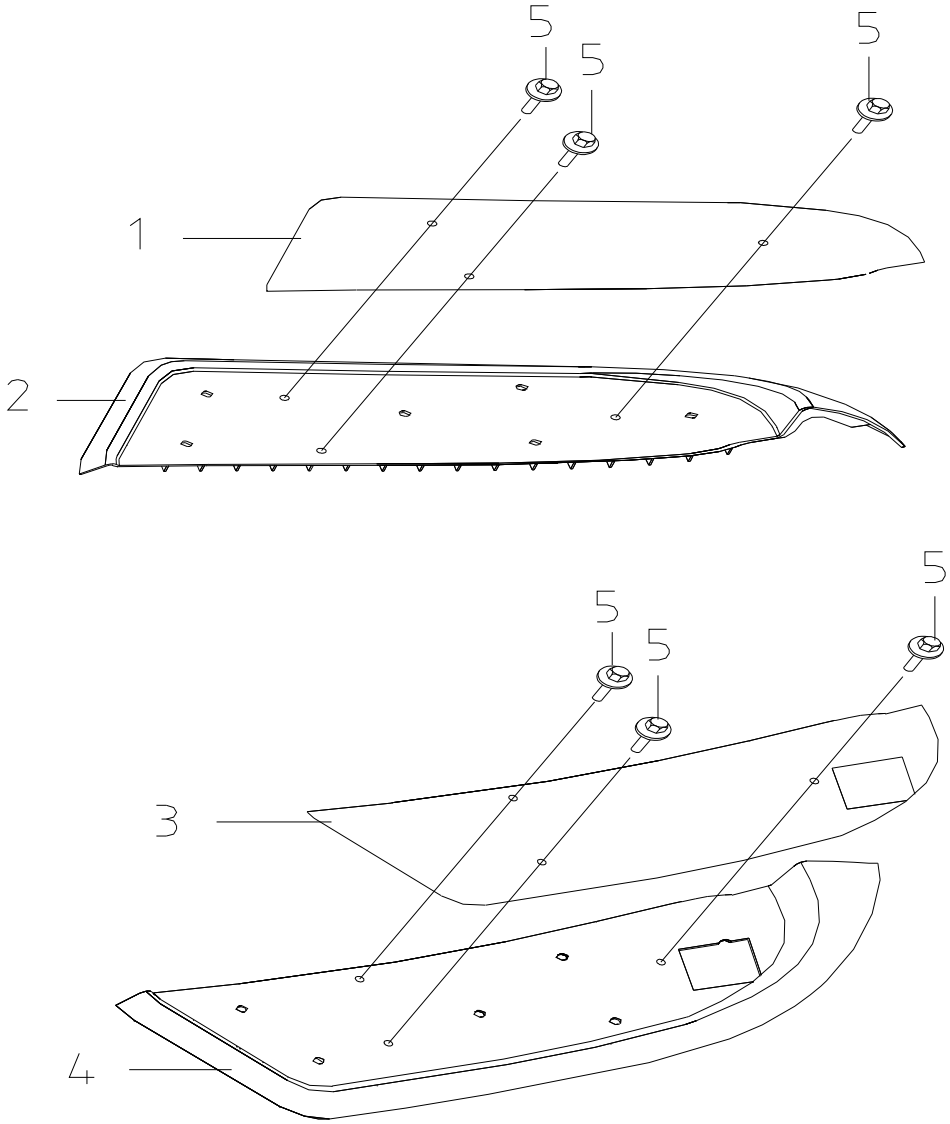

F-17 外观件（2）---EXTERNAL APPEARANCE PIECES（2）

序号 REF NO.	代号(PART NO.)	名称	DESCRIPTION	数量 REGD N	备注 REMARK
1	357100000600	脚踏皮(左)	FOOT PEDAL LEATHER (LEFT)	1	
2	357100000390	脚踏板(左)	FOOT PEDAL (LEFT)	1	
3	357100000610	脚踏皮(右)	FOOT PEDAL LEATHER (RIGHT)	1	
4	357100000400	脚踏板(右)	FOOT PEDAL (RIGHT)	1	
5	GB/T16674-1996	六角法兰面螺栓M6x30	HEXAGONAL BOLT FLANGE M6*30	6	

F-18
外观件（3）

EXTERNAL APPEARANCE PIECES（3）

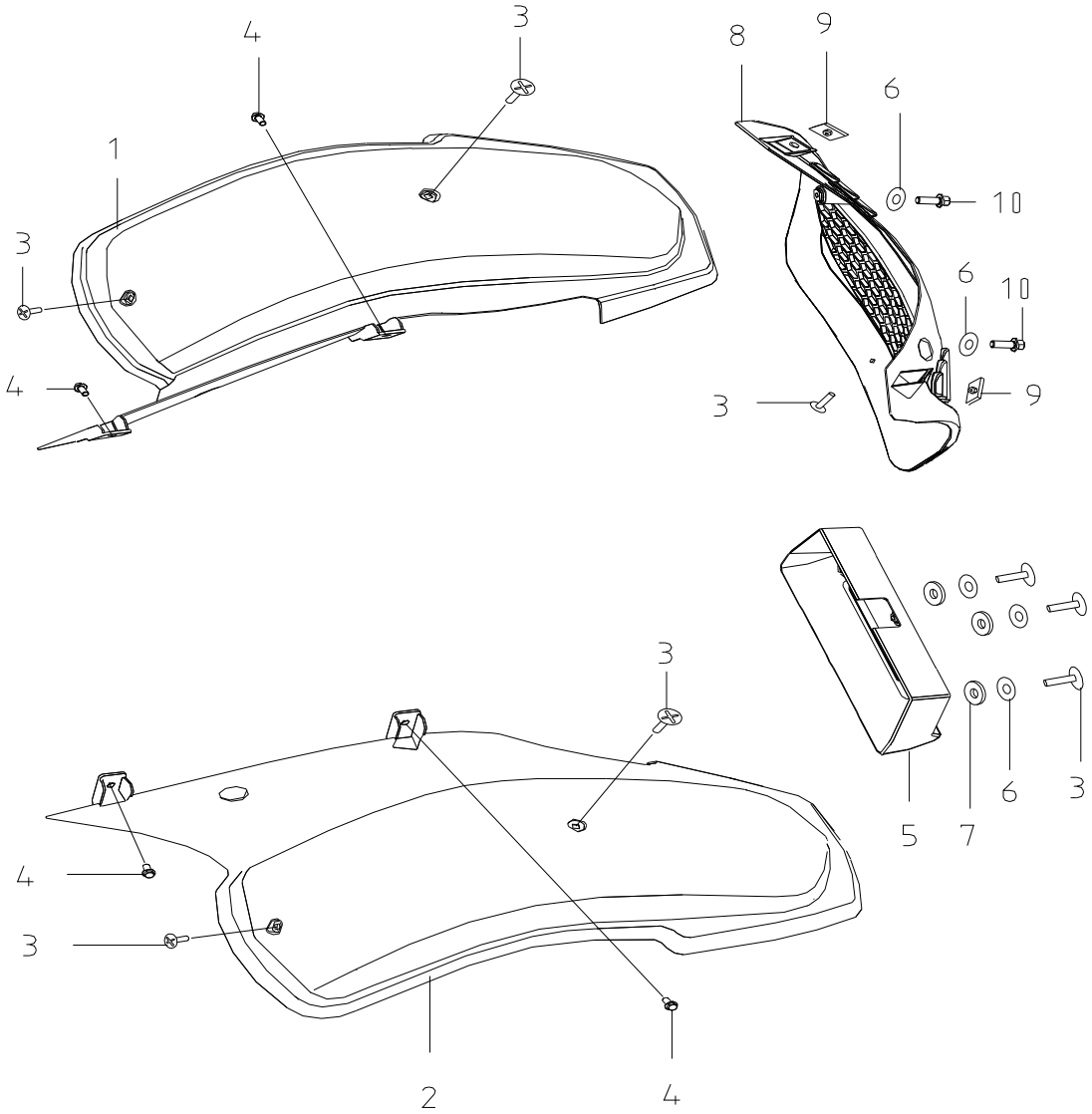

F-18 外观件（3）---EXTERNAL APPEARANCE PIECES（3）

序号 REF NO.	代号(PART NO.)	名称	DESCRIPTION	数量 REGD N	备注 REMARK
1	357100000420	前轮罩(左)	FRONT WHEEL COVER (LEFT)	1	
2	357100000430	前轮罩(右)	FRONT WHEEL COVER (RIGHT)	1	
3	GB/T947-1988	开槽球面大圆柱头螺钉M6x16	SLOTTED SPHERE BIG SPHERICAL HEAD SCREW M6*16	8	
4	GB/T16674-1996	六角法兰面螺栓M6x20	HEXAGONAL BOLT FLANGE M6*20	4	
5	357100000440	前牌照板	FRONT PLATE PANEL	1	
6	GB/T96.1-2002	大垫圈6	BIG WASHER 6	5	
7	354000000330	胶垫φ6	PLASTIC GASKET φ6	3	
8	357100000450	前装饰罩	FRONT DECORATION COVER	1	
9	354000000050	M6夹片螺母	M6 CLIP FLAKE NUT	2	
10	GB/T16674-1996	六角法兰面螺栓M6x16	HEXAGONAL BOLT FLANGE M6*16	2	

F-19

外观件（4）

EXTERNAL APPEARANC
PIECES（4）

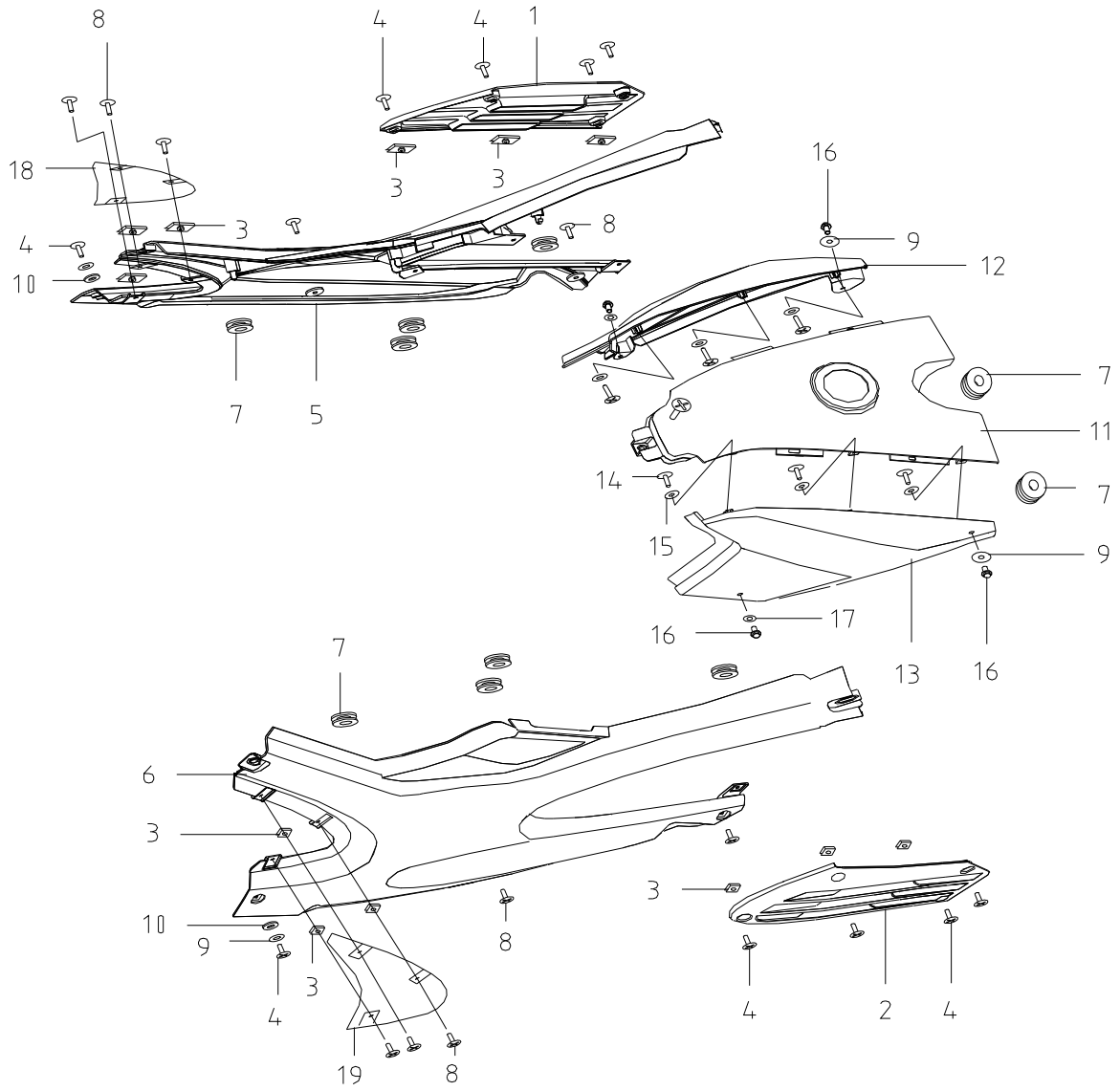

F-19 外观件（4）---EXTERNAL APPEARANCE PIECES（4）

序号 REF NO.	代号(PART NO.)	名称	DESCRIPTION	数量 REGD N	备注 REMARK
1	357100000310	左侧板	LEFT SIDE PANEL	1	
2	357100000320	右侧板	RIGHT SIDE PANEL	1	
3	354000000050	M6夹片螺母	M6 CLIP FLAKE NUT	12	
4	GB/T947-1988	开槽球面大圆柱头螺钉M6x20	SLOTTED SPHERE BIG SPHERICAL HEAD SCREW M6*20	10	
5	357100000460	X梁(左)	X-BEAM (LEFT)	1	
6	357100000470	X梁(右)	X-BEAM (RIGHT)	1	
7	357100000020	橡胶圈A	PLASTIC RING A	10	
8	GB/T947-1988	开槽球面大圆柱头螺钉M6x16	SLOTTED SPHERE BIG SPHERICAL HEAD SCREW M6*16	11	
9	GB/T96.1-2002	大垫圈6	BIG WASHER 6	4	
10	354000000330	胶垫φ6	PLASTIC GASKET φ6	2	
11	357100000490	油箱上板	FUEL TANK UPPER BOARD	1	
12	357100000520	油箱侧盖(左)	FUEL TANK SIDE COVER (LEFT)	1	
13	357100000530	油箱侧盖(右)	FUEL TANK SIDE COVER (RIGHT)	1	
14	GB/T9456-1988	自攻螺钉ST3.9x13	SELF-ATTACK SCREW ST3.9*13	6	
15	GB/T97.1-2002	垫圈4	WASHER 4	6	
16	GB/T16674-1996	六角法兰面螺栓M6x16	HEXAGONAL BOLT FLANGE M8*40	4	
17	GB/T97.1-2002	垫圈6	WASHER 6	2	
18	357155000000	左网格	LEFT GRID	1	
19	357156000000	右网格	RIGHT GRID	1	

F-20

外观件（5）

EXTERNAL APPEARANCE PIECES（5）

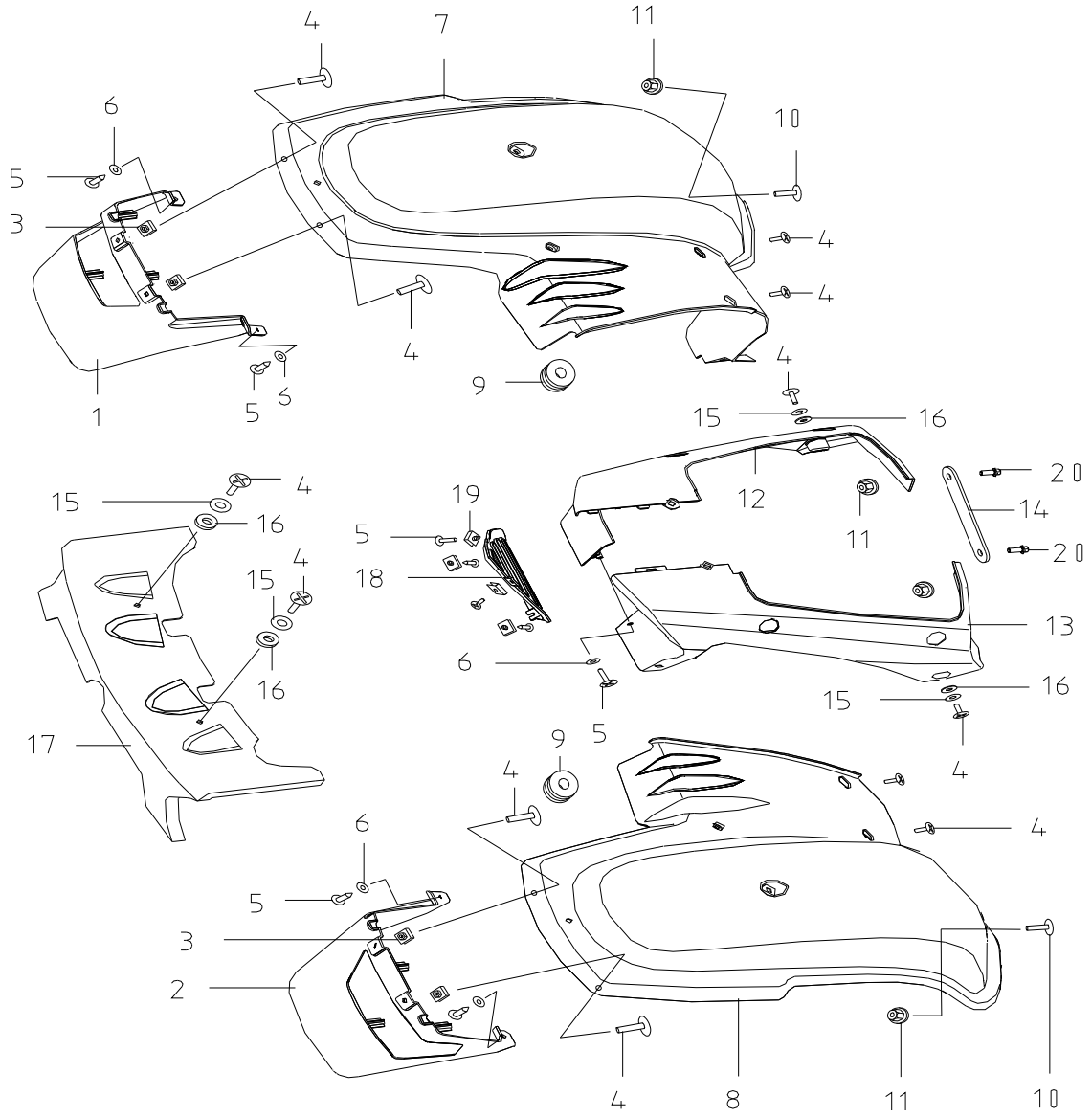

F-20 外观件（5）---EXTERNAL APPEARANCE PIECES（5）

序号 REF NO.	代号(PART NO.)	名称	DESCRIPTION	数量 REGD N	备注 REMARK
1	357100000350	后挡泥板(左)	REAR FENDER (LEFT)	1	
2	357100000360	后挡泥板(右)	REAR FENDER (RIGHT)	1	
3	354000000050	M6夹片螺母	M6 CLIP FLAKE NUT	4	
4	GB/T947-1988	开槽球面大圆柱头螺钉M6x16	SLOTTED SPHERE BIG SPHERICAL HEAD SCREW M6*16	12	
5	GB/T845-1985	自攻螺钉ST3.9x13	SELF-ATTACK SCREW ST3.9*13	9	
6	GB/T97.1-2002	垫圈4	WASHER 4	5	
7	357100000370	后轮罩(左)	REAR WHEEL COVER (LEFT)	1	
8	357100000380	后轮罩(右)	REAR WHEEL COVER (RIGHT)	1	
9	357100000020	橡胶圈A	PLASTIC RING A	2	
10	GB/T947-1988	开槽球面大圆柱头螺钉M6x20	SLOTTED SPHERE BIG SPHERICAL HEAD SCREW M6*20	2	
11	GB/T6187.1-2000	全金属六角法兰面锁紧螺母M6	ALL-METAL SELF-LOCK HEXAGONAL NUT FLANGE M6	4	
12	357100000500	左尾罩	LEFT TAIL COVER	1	
13	357100000510	右尾罩	RIGHT TAIL COVER	1	
14	357100000620	尾罩连接板	TAIL COVER CONNECTION BOARD	1	
15	GB/T96.1-2002	大垫圈6	BIG WASHER 6	4	
16	354000000330	胶垫φ6	PLASTIC GASKET φ6	4	
17	357100000560	后装饰罩	REAR DECORATION COVER	1	
18	357100000650	后网格	REAR GRID	1	
19	357100000680	夹片ST4.2	CLIP FLAKE ST4.2	4	
20	GB/T16674-1996	六角法兰面螺栓M6x16	HEXAGONAL BOLT FLANGE M8*40	4	